Spec sheet of ML5xx54

MITSUBISHI LASER DIODES

ML5xx54 LD SERIES

FOR DISPLAY SYSTEM

TYPE NAME

ML520G54 / ML529P54

DESCRIPTION

Mitsubishi ML5xx54 is a high-power, high-efficient semiconductor laser diode which provides emission wavelength of 638 nm and standard light output of 110mW.

This LD has narrow-stripe structure which enables better beam quality even at high output power.

FEATURES

- High Output Power: 110mW (CW)
- High Efficiency: 1.1W/A (typ.)
- Visible Light: 638nm (typ.)
- φ5.6mm TO-CAN PKG / φ3.8mm Cap-less PKG

APPLICATION

Display system

ABSOLUTE MAXIMUM RATINGS (Note 1)

Symbol	Parameter	Conditions	Ratings	Unit
Po	Light output power	CW	**110(Tc ≤ 50 °C), 90(50 °C < Tc ≤ 60 °C)**	mW
VRL	Reverse voltage	-	**2**	V
Tc	Case temperature	-	**-5 ~ +60**	°C
Tstg	Storage temperature	-	**-40 ~ +100**	°C

Note1: The maximum rating means the limitation over which the laser should not be operated even instant time. This does not mean the guarantee of its lifetime. As for the reliability, please refer to the reliability report issued by Quality Assurance Section, HF & Optical Semiconductor Division, Mitsubishi Electric Corporation.

ELECTRICAL/OPTICAL CHARACTERISTICS (Tc=25°C)

Symbol	Parameter	Test conditions	Min.	Typ.	Max	Unit
Ith	Threshold current	CW	**35**	**50**	**65**	mA
Iop	Operating current	CW, Po=110mW	**100**	**150**	**200**	mA
Vop	Operating voltage	CW, Po=110mW	**2.4**	**2.7**	**3.0**	V
η	Slope efficiency	CW, Po=110mW	**0.8**	**1.1**	**1.3**	mW/mA
λp	Peak wavelength	CW, Po=110mW	**632**	**638**	**644**	nm
θ//	Beam divergence angle (parallel)	CW, Po=110mW	**5**	**9**	**13**	°
θ⊥	Beam divergence angle (perpendicular)	CW, Po=110mW	**14**	**19**	**24**	°

OUTLINE

ML520G54

ϕ5.6mm

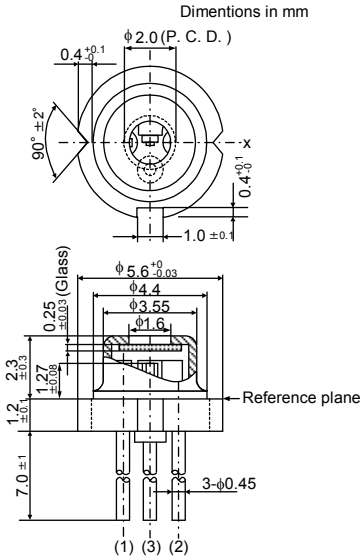

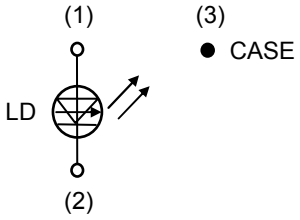

ML520G54

ML529P54

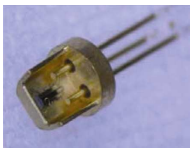

ϕ3.8mm

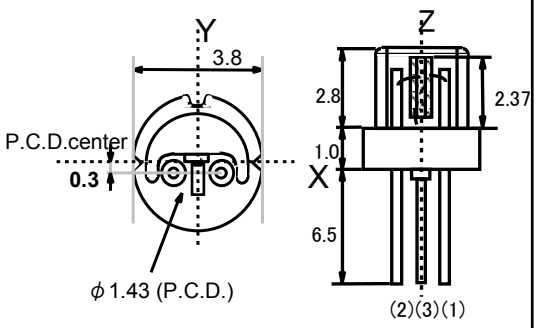

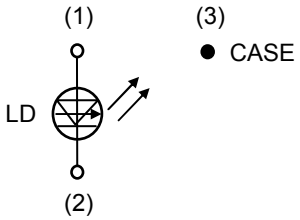

ML529P54

Typical Characteristics of ML520G54

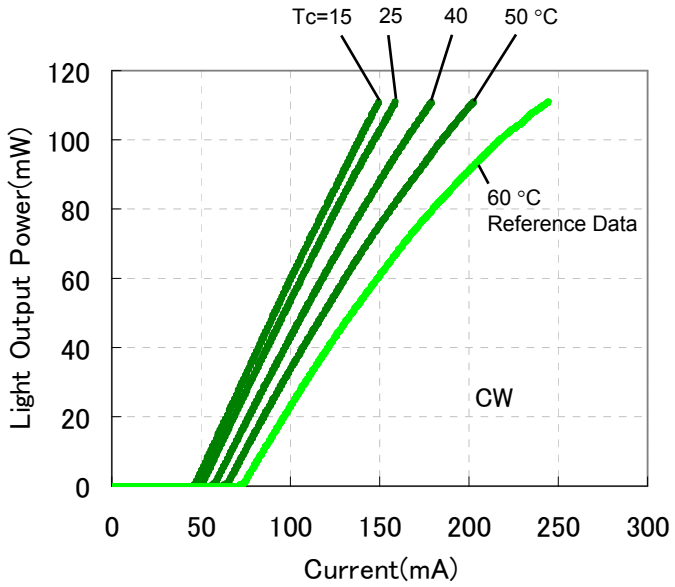

Light Output Power vs. Current (CW)

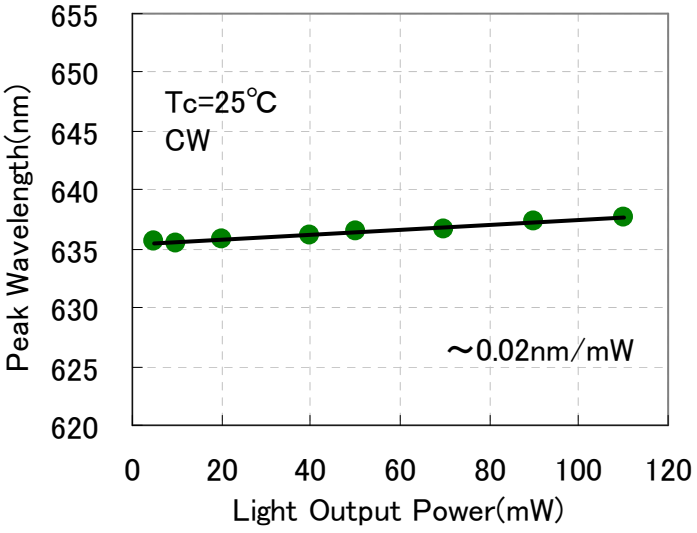

Peak Wavelength vs. Light Output Power

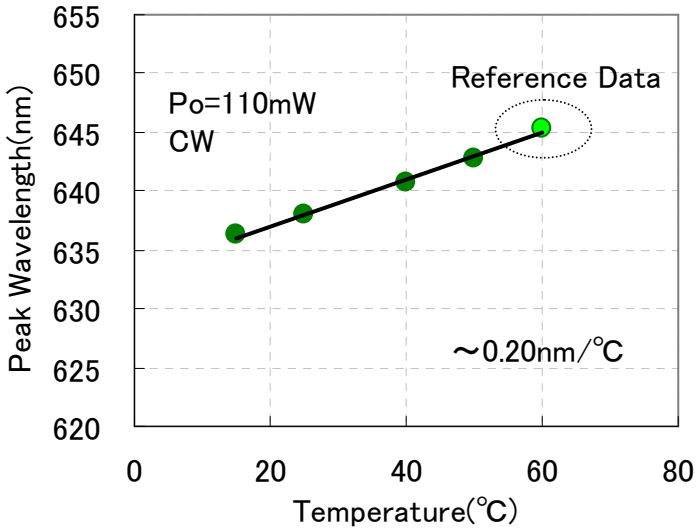

Peak Wavelength vs. Temperature

Requests Regarding Safety Designs

Mitsubishi Electric constantly strives to raise the level of its quality and reliability. Despite these concerted efforts, however, there will be occasions when our semiconductor products suffer breakdowns, malfunctions or other problems. In view of this reality, it is requested that every feasible precaution be taken in the pursuit of redundancy design, malfunction prevention design and other safety-related designs, to prevent breakdowns or malfunctions in our products from resulting in accidents involving people, fires, social losses or other problems, thereby upholding the highest levels of safety in the products when in use by customers.

Matters of Importance when Using these Materials

1. These materials are designed as reference materials to ensure that all customers purchase Mitsubishi Electric semiconductors best suited to their specific use applications. Please be aware, however, that the technical information contained in these materials does not comprise consent for the execution or use of intellectual property rights or other rights owned by Mitsubishi Electric Corporation.
2. Mitsubishi Electric does not assume responsibility for damages resulting from the use of product data, graphs, charts, programs, algorithms or other applied circuit examples described in these materials, or for the infringement of the rights of third-party owners resulting from such use.
3. The data, graphs, charts, programs, algorithms and all other information described in these materials were current at the issue of these materials, with Mitsubishi Electric reserving the right to make any necessary updates or changes in the products or specifications in these materials without prior notice. Before purchasing Mitsubishi Electric semiconductor products, therefore, please obtain the latest available information from Mitsubishi Electric directly or an authorized dealer.
4. Every possible effort has been made to ensure that the information described in these materials is fully accurate. However, Mitsubishi Electric assumes no responsibility for damages resulting from inaccuracies occurring within these materials.
5. When using the product data, technical contents indicated on the graphs, charts, programs or algorithms described in these materials, assessments should not be limited to only the technical contents, programs and algorithm units. Rather, it is requested that ample evaluations be made of each individual system as a whole, with the customer assuming full responsibility for decisions on the propriety of application. Mitsubishi Electric does not accept responsibility for the propriety of application.
6. The products described in these materials, with the exception of special mention concerning use and reliability, have been designed and manufactured with the purpose of use in general electronic machinery. Accordingly these products have not been designed and manufactured with the purpose of application in machinery or systems that will be used under conditions that can affect human life, or in machinery or systems used in social infrastructure that demand a particularly high degree of reliability. When considering the use of the products described in these materials in transportation machinery (automobiles, trains, vessels), for objectives related to medical treatment, aerospace, nuclear power control, submarine repeaters or systems or other specialized applications, please consult with Mitsubishi Electric directly or an authorized dealer.
7. When considering use of products for purposes other than the specific applications described in these materials, please inquire at Mitsubishi Electric or an authorized dealer.
8. The prior consent of Mitsubishi Electric in writing is required for any reprinting or reproduction of these materials.
9. Please direct any inquiries regarding further details of these materials, or any other comments or matters of attention, to Mitsubishi Electric or an authorized dealer.