ML561F10-01

FOR Nd:YAG LASER PUMPING

Preliminary

TYPE NAME **ML561F10-01**

This type is under development. Therefore, please note that this data sheet may be changed without any notice.

DESCRIPTION

ML5xxx is a high-power, high-efficient semiconductor laser diode which provides a stable oscillation with emission wavelength of 805nm and standard CW light output of 1.0W.

ML5xxx has small internal loss which improves the slope efficiency (reduction of the operating current).

Also, ML5xxx has an Al-free single quantum well active layer, which prevents Catastrophic Optical Degradation (COD) even at extremely high output powers. That leads to highly reliable operation.

FEATURES

- Can-packing Laser diode (10.5mmϕ)
- High Output Power: 1.0W (CW)
- Highly reliable active layer : Al-free MOCVD structure
- Lasing Wavelength: 805 nm (typ.)

APPLICATION

Nd:YAG Laser Pumping, Direct-Use Applications

ABSOLUTE MAXIMUM RATINGS (Note 1)

<Expected performance after mounted, not guaranteed>

Symbol	Parameter	Conditions	Ratings	Unit
Po	Light output power	CW	**1.0**	W
VRL	Reverse voltage	-	**2**	V
Tc	Case Temperature	-	**-20～+60**	℃
Tstg	Storage temperature	-	**-40 ~ +100**	°C

Note1: The maximum rating means the limitation over which the laser should not be operated even instant time.
This does not mean the guarantee of its lifetime.

ELECTRICAL/OPTICAL CHARACTERISTICS (Tc=25°C)

<Expected performance after mounted, not guaranteed>

Symbol	Parameter	Test conditions	Min.	Typ.	Max	Unit
Ith	Threshold current	CW	**-**	**0.24**	**0.37**	A
Iop	Operating current	CW, Po=1.0W	**-**	**1.20**	**1.35**	A
Vop	Operating voltage	CW, Po=1.0W	**-**	**1.8**	**2.0**	V
η	Slope efficiency	CW, Ith-Iop	**0.95**	**1.05**	**-**	W/A
λc 1)	Central wavelength	CW, Po=1.0W	**795**	**805**	**815**	nm
θ ‖	Beam divergence angle (Full width at half maximum)	CW, Po=1.0W (Lateral)	**-**	**-**	**15**	°
θ⊥	Beam divergence angle (Full width at half maximum)	CW, Po=1.0W (Perpendicular)	**-**	**34**	**37**	°

1) Wavelength is adjusted on request.

MITSUBISHI ELECTRIC

Preliminary

OUTLINE DRAWINGS
(Dimension in mm)

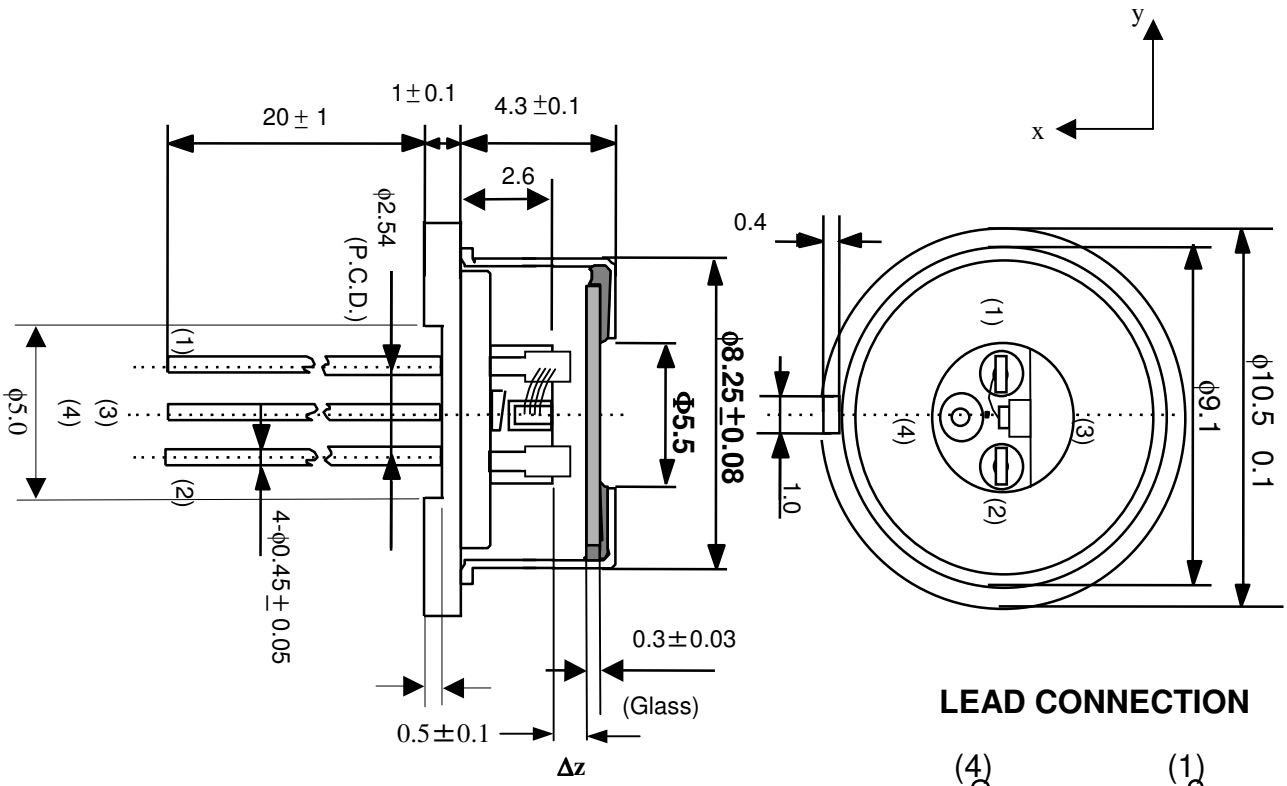

LEAD CONNECTION

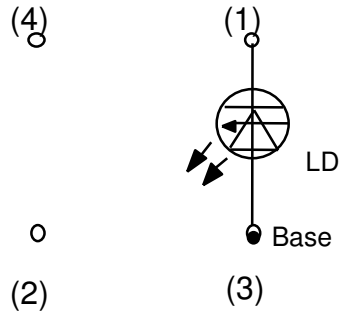

Note)
Positional accuracy of the emitting point respect to the Base.

$-0.15 \leqq \Delta x \leqq +0.05$

$-0.15 \leqq \Delta y \leqq +0.15$

$\Delta z: 0.95 \pm 0.20$

Preliminary

TENTATIVE CHARACTERISTICS (Reference Data)

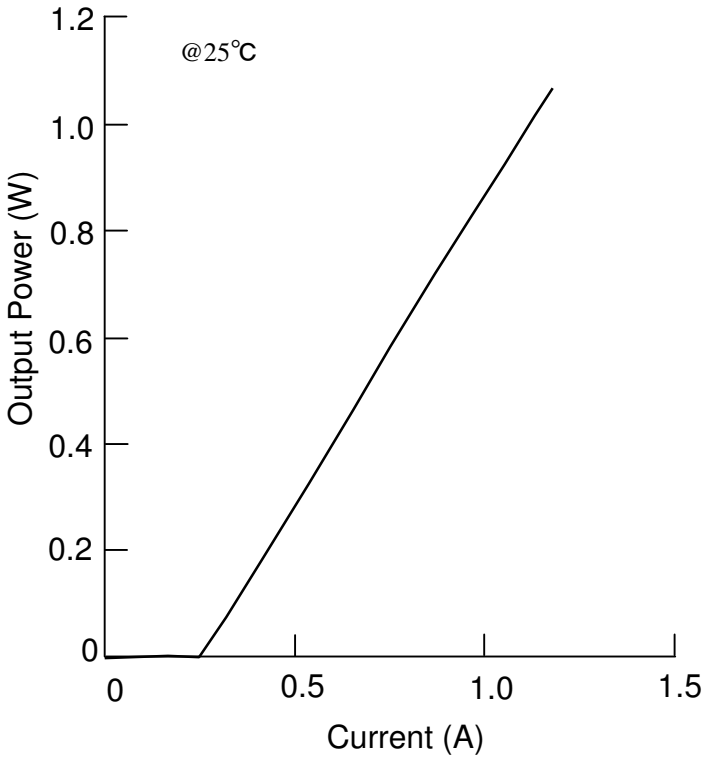

Output Power vs. Current (CW)

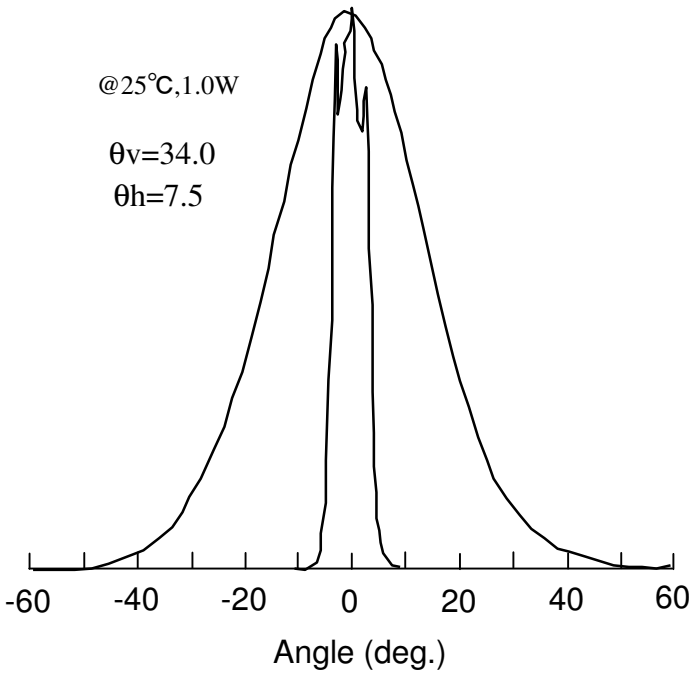

Far Field Patterns