Migration from AT86RF211 to AT86RF211S

Introduction

The aim of this Application Note is to assist current users of the AT86RF211 in migrating to the AT86RF211S. It includes a description of the general performances that are expected and step-by-step instructions for validating /testing /verifying your application after the migration is performed.

The AT86RF211S is fully compatible with the AT86RF211, which implies that the same hardware and software can be used with minor variations.

- Software: direct substitution of one device by the other does not require any change of software. Please note that CTRL1[0] equals 1 (bit 0 called ADDFEAT) leads to new features. Thus if the current AT86RF211 application sets this register, unintentional mismatches with the AT86RF211S may occur.

- Hardware: direct substitution of one device by the other does not normally require any change of hardware. As in any RF application, however, the output power and general behavior depend on the PCB layout design. Therefore, some items (listed in this documentation) must be checked to qualify the migration.

A quick overview of the AT86RF211S' new features is included at the end of this document.

Conversion Guide from AT86RF211 to AT86RF211S

Application Note

5398A-WIRE-11/04

General Overview

The architecture of the blocks has not been changed. The AT86RF211S is pin-to-pin compatible with the AT86RF211. Pin 17 becomes available to users to access new features.

Figure 1. Block Diagram

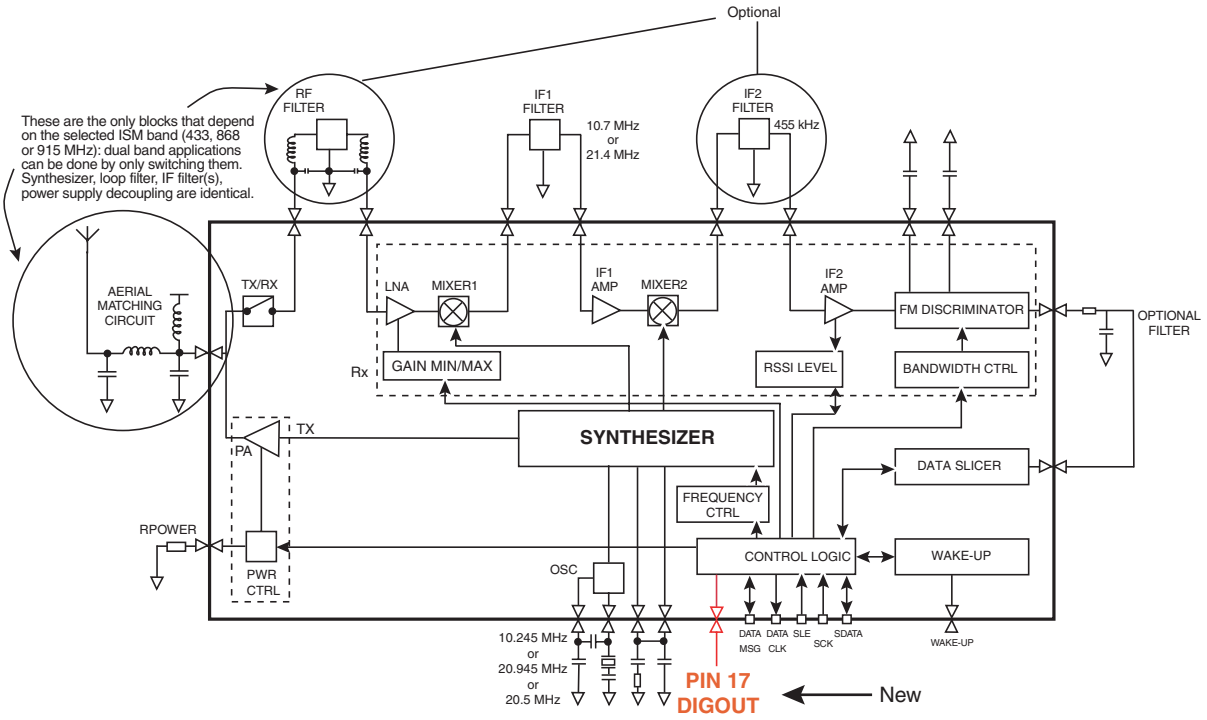

Description

This section describes the general functions of the AT86RF211S. The Rx and Tx blocks are detailed in separate paragraphs.

Voltage Supply

The supply implementation is the same for both the AT86RF211 and AT86RF211S. Changing the decoupling is not required.

The maximum supply voltage of the AT86RF211S is 3.6V, whereas the AT86RF211 is operable at 3.75V. At 3.75V, the AT86RF211S is EFR (Early Failure Rate) qualified for six months.

Current Consumption

The current consumption of the AT86RF211S is approximately 20% lower than that of the AT86RF211 in both the Rx and Tx modes. Therefore, the voltage drop into the decoupling resistor is smaller with the AT86RF211S.

The MVCC field of the STATUS register, measured on pin 10 (DIVCC) may be higher with the AT86RF211S, given the same voltage supply but the lower voltage drop.

Crystal Oscillator

No change.

Synthesizer

No change has been made to the architecture of the synthesizer. Hence, the frequency generation does not vary and the synthesized frequencies are identical for both the AT86RF211S and the AT86RF211. The modulation (F0 and F1 registers) has not been changed either. Therefore, the frequency registers, generated for the AT86RF211 also apply to the AT86RF211S.

Digital Features

No changes have been made to the digital features. Register addressing is unchanged. Only new features are accessed with the CTRL1[0] register (bit 0 is named ADDFEAT and is set to 1).

There is one constraint concerning the SLE/SCK synchronization: SCK must be set to 0 (low) before SLE is toggled, whether up or down. Please ensure that your current software complies with this.

Receiver Bandwidth

No changes have been made to the receiver bandwidth. The bandwidth of an AT86RF211 application depends on the filters used: SAW, IF1 (10.7 MHz), or IF2 (455 kHz). The AT86RF211S uses this same principle. The impedance conditions of the IF1 and IF2 are unchanged. The same filters can therefore be used—no change of bandwidth is expected.

Data Slicing

The architecture of the data slicer has not been changed and the two modes available on the AT86RF211 (*external* and *internal*) are valid for the AT86RF211S. When the device is in *external* mode, the charge and discharge times of the capacitor on SKFILT (pin 25) are identical—the internal resistor is still 100 kΩ. When the device is in *internal* mode, the reference mode is set in the same way thanks to a 4-bit DAC with 15 mV/LSB/V and a mean value (Vcc/2) for DSREF[3:0] = '0111', leading to compatibility of the whole.

The comparator device of the data slicer features a hysteresis of approximately 2 % in order to guarantee a single transition for any slope of the signal. This is transparent in the current application.

A new feature allows you to keep the SKFILT capacitor on *hold* after a charge time. This new feature requires specific programming (please refer to the Datasheet “FSK Transceiver for ISM Radio Applications” reference 5348 and the application note “Benefits of Charge and Hold” reference 5420).

RSSI

No change. Notice that a shift of RSSI code when replacing the AT86RF211 by the AT86RF211S may be due to the typical dispersion of this block, as described in the Datasheet “FSK Transceiver for ISM Radio Applications” reference 5348.

Clock Recovery

No change.

In addition to the existing architecture, you can take advantage of a modified clock recovery state machine thanks to the new features of the CTRL1[0] = 1 register. This new mode makes the DATACLK less sensitive to the duty cycle of the received data stream, providing enhanced synchronization within a difficult environment.

Migration of the TX Section

General Description

The Tx section is essentially engineered around the power amplifier and synthesizer.

The specifications of the TX section's performances are given by the output power and control of this power, as well as by the radiated spectrum.

Output Power

The same ALC loop architecture as the AT86RF211 is used to control the output power, which uses the TXLVL field of the CTRL1 register with the R_{POWER} resistor (pin 1) used as a reference.The output power is therefore monitored using the same features and the same performances should be expected.

The most noticable changes relate to the reduced current consumption. If the resistors are used for decoupling of the open collector, the output power may slightly increase because of the lower voltage drop. Of course, this increase of the output power remains negligible.

Again, direct substitution of one device by the other does not normally require any change; however, the output power and general behavior must be checked.

If the TXLVL software control is used dynamically during the application transmission, we recommend that you check that the dynamic range of this control suits your application. If it does not directly fulfill the power range of the AT86RF211, then the Rpower must be replaced by a higher value, which will provide the same power range.

Phase Noise

The phase noise of the AT86RF211S has been improved. Considering that the same loop filter is used for the PLL, the phase noise is decreased by 5 to 10 dB at a 50 to 100 kHz frequency distance from the carrier. This directly benefits the selectivity and occupied bandwidth.

PA Decoupling

The supply inductor of the PA's open collector requires careful decoupling. We recommend that you follow the described decoupling procedure to ensure that the application operates correctly, regarless of the voltage supply, output power or implementation.

- Boards with printed coil at 868 MHz/915 MHz: like our demo boards, no decoupling capacitor is required but a series resistor of 10Ω minimum is recommended.
- Boards with lumped coil (12 nH for 868 MHz and 10 nH for 915 MHz): the recommended decoupling capacitor is 27 pF in combination with a choke inductor (typically 1 µH)

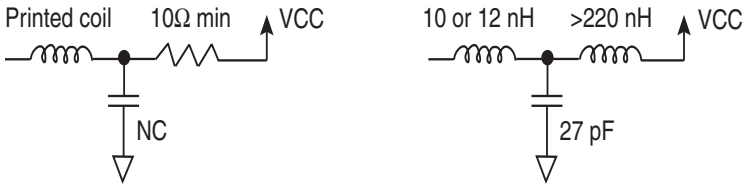

- 433 MHz applications: no changes are recommended.

Step-by-step Validation of the Transmitter

Figure 2. TX Validation Flow Chart

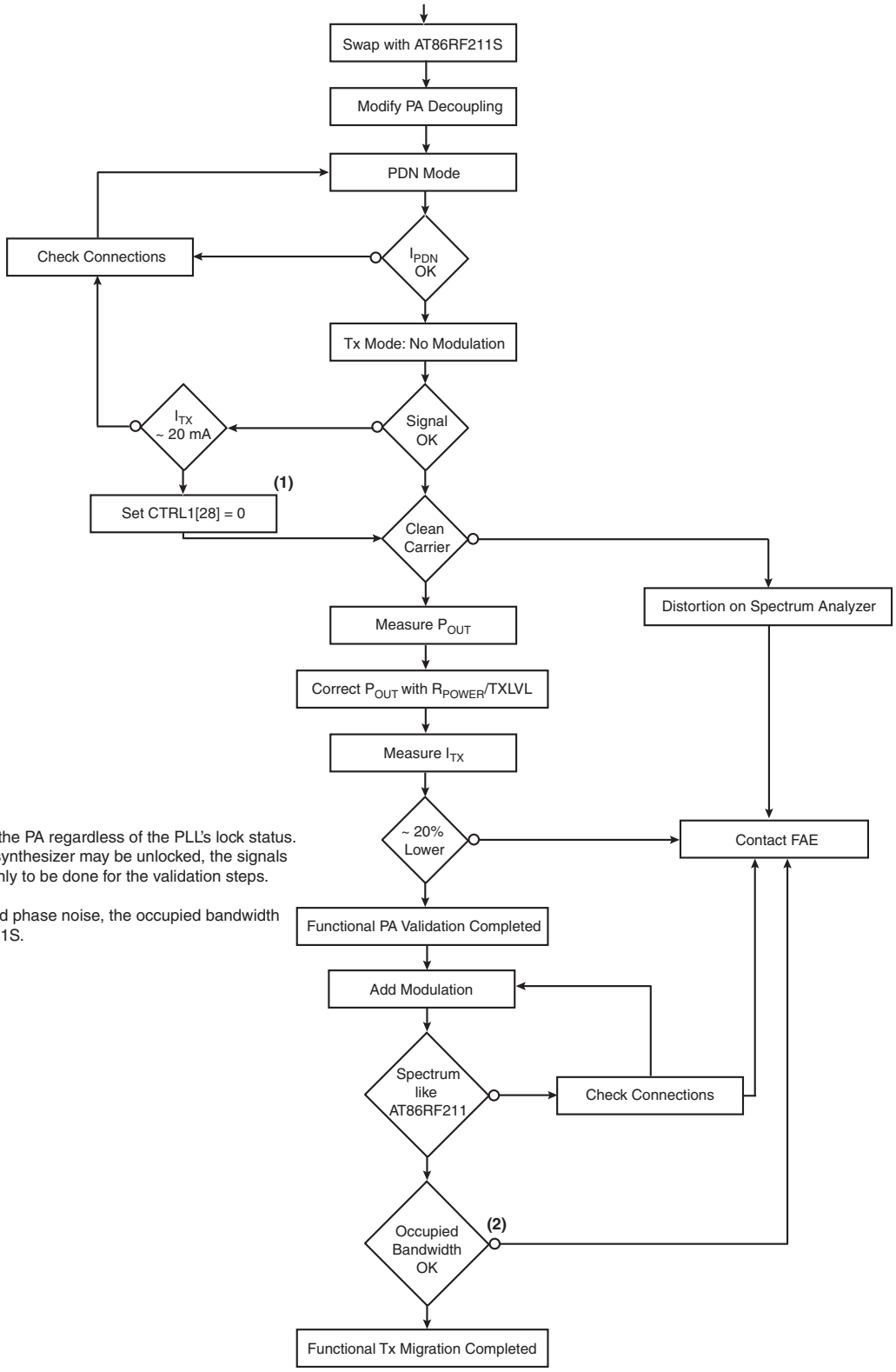

(1) Doing so switches on the PA regardless of the PLL's lock status. In this way, although the synthesizer may be unlocked, the signals can be checked. This is only to be done for the validation steps.

(2) Thanks to the improved phase noise, the occupied bandwidth is narrower with the RF211S.

Compliance with Standards and Regulations

The AT86RF211 application, like any other RF application, must comply with local regulations.

Certain measurements must be made that check the output power, spurious emissions, harmonics levels, occupied bandwidth of the modulation and/or the modulation range.

All the measurements we have conducted concerning these specifications on different demo boards have demonstrated the same levels or lower.

Nevertheless, a comparative radiated measurement must be done. It can be carried out in a free-field environment at a given distance.

The easiest way to proceed is to make a comparison measurement of the AT86RF211 and AT86RF211S modules by following this procedure:

1. Measure the center frequency output power
2. Measure the H2 and H3 levels
3. Scan the spectrum from 0 Hz to 3 GHz and check for any peaks above the levels of the AT86RF211 module
4. Check that the occupied spectrum of the modulation has not widened

Note that because the phase noise of the RF211S is lower than that of the RF211, some peaks may seem higher. They are in fact at the same level but stand out more due to the lower phase noise.

Compatibility between the AT86RF211 and the AT86RF211S should facilitate this procedure. An increase or decrease of the carrier's power level may be observed and may need to be changed accordingly by re-programming the R_{POWER} or TXLVL:

1. To increase the output power, decrease R_{POWER}
2. To decrease the output power, increase R_{POWER}
3. The minimum power corresponds to TXLVL = '000'
4. The maximum power corresponds to TXLVL = '111'

Migration of the Rx Section

The Rx section is mainly composed of the synthesizer and the Rx chain (the Rx/Tx switch, the integrated LNA/mixer, the IF1 mixer, the IF2 amplification chain, the discriminator and the data slicer). The architecture of these elements has not been changed.

The elements by which the performances of the Rx section are evaluated include:

- The overall Noise Figure of the Rx chain
- The bandwidth
- The performance of the discriminator
- The operating conditions and performance of the data slicer
- The performance of the clock recovery (if used)

Noise Figure of the Rx Chain

The overall Noise Figure and gain of the Rx chain remains the same as for the AT86RF211, although the transceiver's power consumption is reduced. The matching conditions of the integrated LNA and integrated switch are identical to those of the AT86RF211.

The AT86RF211 LNA has a higher gain (+ 1 dB) and a lower Noise Figure (-2 dB).
The integrated switch records higher losses (+ 1dB).

Considering this, when the AT86RF211 is substituted by the AT86RF211S, the overall Noise Figure and Gain remains the same.

Demodulation

The discriminator of the AT86RF211S is the same as for the AT86RF211. The frequency-to-voltage conversion gain remains the same for both bands (narrow and standard discriminator bandwidth) that are common to both transceivers. For a given modulation and considering the same programming of the CTRL1 [6] register
(= FSKBW), the same voltage swing is expected on the DISCOUT pin (pin 27).

The natural DC offset on the output of the discriminator has been reduced to operate closer to $V_{CC}/2$. Nevertheless, the DISCHIGH/ DISCLOW bits are still available, featuring a 100% compatibility with the existing production process to fine- tune this parameter. In the first instance, the AT86RF211S functions like the AT86RF211.

Should you want to take advantage of the improvements of the discriminator, please refer to the new application note related to this topic "Demodulation and Crystal Requirements for the AT86RF211S", reference 5418.

New conversion gains are available to achieve a deviation modulation of up to approximately ±125 kHz.

Cut-off Frequency

The AT86RF211S discriminator has an internal standard cut-off frequency slighter superior to the one on the AT86RF211. You may notice that the leakage noise on the DISCOUT pin is higher on the AT86RF211S than on the AT86RF211. After the Low Pass Filter (R/C) between DISCOUT (pin 25) and DSIN (pin 26), this noise is cancelled out as the external LPF sets the lowest $F_{Cut\text{-}off}$ of the application.

Should your application produce more noise on DSIN with the AT86RF211S than with the AT86RF211, we recommend that you increase the capacitor of the external LPF. The $F_{Cut\text{-}off}$ of the combined discriminator/external LPF will then match that of the AT86RF211.

Considering these parameters, the overall sensitivity is unchanged and should be the same for both transceivers.

Step-by-step Validation
Receiver

Figure 3. RX Validation Flow Chart

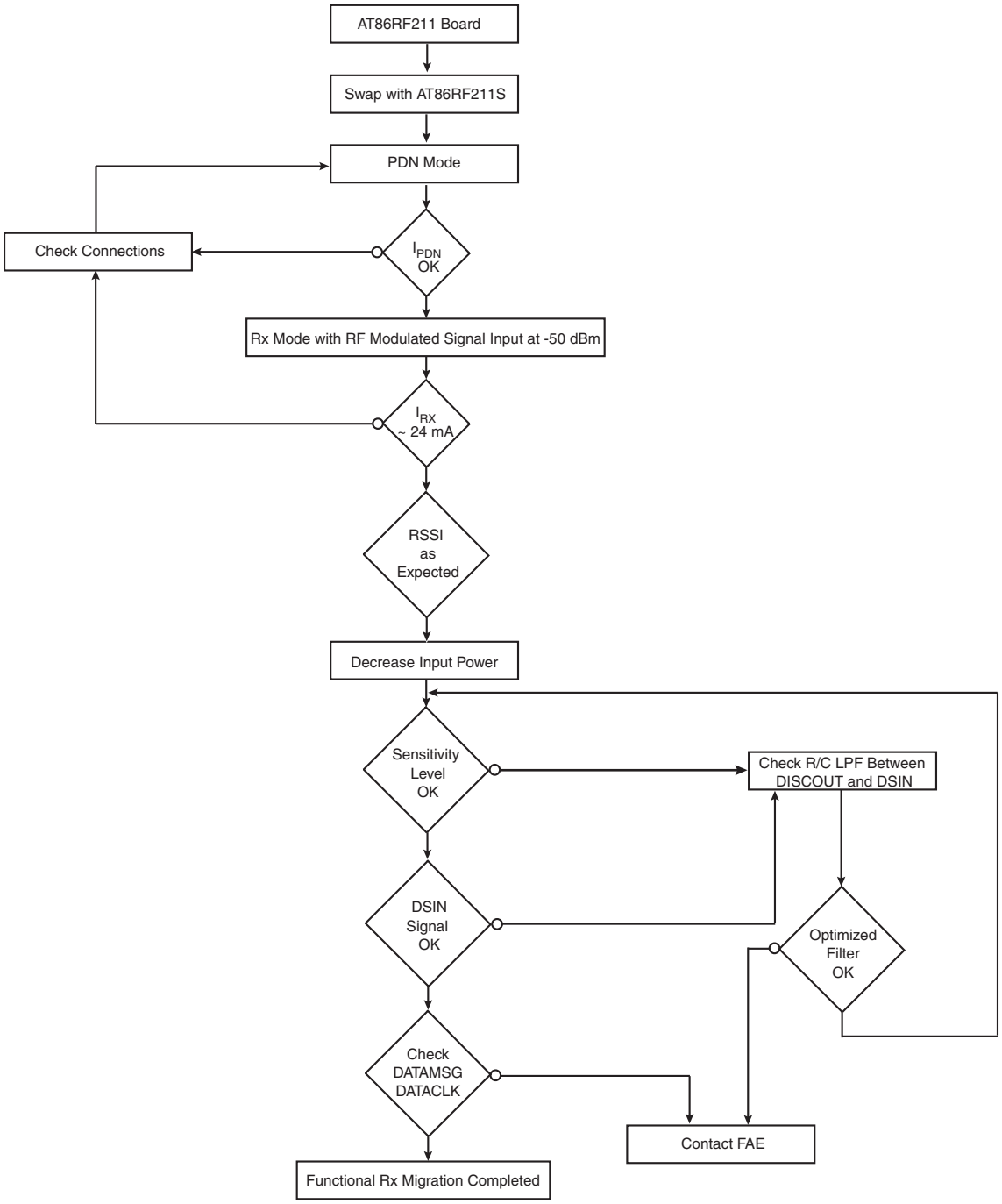

Improvements and New Features

Various features of the AT86RF211S have been improved and are available with new programming.

Improved State Machine

- DATACLK: new algorithm, less sensitive to the duty cycle of the received bits
- SYNCDATAMSG: the output received data stream is synchronized with DATACLK
- DATACLKEN: DATACLK is available only if MRSSI > TRSSI
- WUSYNC and WUHEAD: new algorithm, header synchronization is less sensitive to the duty cycle of the received bits. A data rate above 10 kbps is possible. Please refer to the application note Wake Up-revision 3.
- PLLL: this flag always complies with the PLL state, regardless of the frequency programming

New Features

- Charge/hold mode: enables you to keep the SKFILT capcitor in *hold* mode to prevent discharge when data slicing is active so as to obtain a true NRZ transmission with an automatic compensation of drifts
- XTALRUN: enables you to keep the oscillator running while in PDN mode to achieve a very short settling time to Tx or Rx mode.
- DISCRANGE: the AT86RF211S accepts deviations up to ±125 kHz. Four different ranges are selectable:
  - NDB (±25 kHz)
  - SDB (± 50 kHz)
  - NDB (±75 kHz)
  - WDB (±125 kHz)

Please refer to the application note “Demodulation and Crystal Requirements for the AT86RF211S” reference 5418.

- XTAL205M: enables you to use a 20.5 MHz crystal with IF set to 10.7 MHz
- RSSICLK: enables a quick RSSI setting thanks to a x8 clock (1.5 µs/LSB)
- Output of pin 17: pin 17 was previously reserved and not connected, but can now deliver several signals:
  - Divided XTAL reference clock
  - Carrier detection when RSSI is above predefined TRSSI
  - XTO running flag
  - 455 kHz signal from the discriminator PLL
  - Receive mode flag
  - 1 kHz reference clock of the wake-up timer
  - Lock detect flag *PLLL* of the main PLL

Additional assistance may be obtained through the dedicated support mail: **smartrf@gfo.atmel.com**

Atmel Corporation

2325 Orchard Parkway
San Jose, CA 95131, USA
Tel: 1(408) 441-0311
Fax: 1(408) 487-2600

Regional Headquarters

Europe
Atmel Sarl
Route des Arsenaux 41
Case Postale 80
CH-1705 Fribourg
Switzerland
Tel: (41) 26-426-5555
Fax: (41) 26-426-5500

Asia
Room 1219
Chinachem Golden Plaza
77 Mody Road Tsimshatsui
East Kowloon
Hong Kong
Tel: (852) 2721-9778
Fax: (852) 2722-1369

Japan
9F, Tonetsu Shinkawa Bldg.
1-24-8 Shinkawa
Chuo-ku, Tokyo 104-0033
Japan
Tel: (81) 3-3523-3551
Fax: (81) 3-3523-7581

Atmel Operations

Memory
2325 Orchard Parkway
San Jose, CA 95131, USA
Tel: 1(408) 441-0311
Fax: 1(408) 436-4314

Microcontrollers
2325 Orchard Parkway
San Jose, CA 95131, USA
Tel: 1(408) 441-0311
Fax: 1(408) 436-4314

La Chantrerie
BP 70602
44306 Nantes Cedex 3, France
Tel: (33) 2-40-18-18-18
Fax: (33) 2-40-18-19-60

ASIC/ASSP/Smart Cards
Zone Industrielle
13106 Rousset Cedex, France
Tel: (33) 4-42-53-60-00
Fax: (33) 4-42-53-60-01

1150 East Cheyenne Mtn. Blvd.
Colorado Springs, CO 80906, USA
Tel: 1(719) 576-3300
Fax: 1(719) 540-1759

Scottish Enterprise Technology Park
Maxwell Building
East Kilbride G75 0QR, Scotland
Tel: (44) 1355-803-000
Fax: (44) 1355-242-743

RF/Automotive
Theresienstrasse 2
Postfach 3535
74025 Heilbronn, Germany
Tel: (49) 71-31-67-0
Fax: (49) 71-31-67-2340

1150 East Cheyenne Mtn. Blvd.
Colorado Springs, CO 80906, USA
Tel: 1(719) 576-3300
Fax: 1(719) 540-1759

Biometrics/Imaging/Hi-Rel MPU/
High Speed Converters/RF Datacom
Avenue de Rochepleine
BP 123
38521 Saint-Egreve Cedex, France
Tel: (33) 4-76-58-30-00
Fax: (33) 4-76-58-34-80

Literature Requests
www.atmel.com/literature

Disclaimer: The information in this document is provided in connection with Atmel products. No license, express or implied, by estoppel or otherwise, to any intellectual property right is granted by this document or in connection with the sale of Atmel products. **EXCEPT AS SET FORTH IN ATMEL'S TERMS AND CONDITIONS OF SALE LOCATED ON ATMEL'S WEB SITE, ATMEL ASSUMES NO LIABILITY WHATSOEVER AND DISCLAIMS ANY EXPRESS, IMPLIED OR STATUTORY WARRANTY RELATING TO ITS PRODUCTS INCLUDING, BUT NOT LIMITED TO, THE IMPLIED WARRANTY OF MERCHANTABILITY, FITNESS FOR A PARTICULAR PURPOSE, OR NON-INFRINGEMENT. IN NO EVENT SHALL ATMEL BE LIABLE FOR ANY DIRECT, INDIRECT, CONSEQUENTIAL, PUNITIVE, SPECIAL OR INCIDENTAL DAMAGES (INCLUDING, WITHOUT LIMITATION, DAMAGES FOR LOSS OF PROFITS, BUSINESS INTERRUPTION, OR LOSS OF INFORMATION) ARISING OUT OF THE USE OR INABILITY TO USE THIS DOCUMENT, EVEN IF ATMEL HAS BEEN ADVISED OF THE POSSIBILITY OF SUCH DAMAGES.** Atmel makes no representations or warranties with respect to the accuracy or completeness of the contents of this document and reserves the right to make changes to specifications and product descriptions at any time without notice. Atmel does not make any commitment to update the information contained herein. Atmel's products are not intended, authorized, or warranted for use as components in applications intended to support or sustain life.

© Atmel Corporation 2004. **All rights reserved.** Atmel®, logo and combinations thereof, are registered trademarks, and Everywhere You Are™ is the trademark of Atmel Corporation or its subsidiaries. Other terms and product names may be trademarks of others.

Printed on recycled paper.

5398A–WIRE–11/04