MINDSPEED
BUILD IT FIRST™

Voice Aggregation Network Processor

M27479

Provides a Complete VoIP Media Gateway Function When Combined with the Mindspeed Comerto™ Family of Voice Processors.

The M27479 aggregates multiple Comcerto voice processors and provides routing, security, and traffic management capabilities.

KEY FEATURES

- Complete VoIP system solution
- POS or Ethernet based Comcerto aggregation
- Packet routing, filtering, and NAT
- Denial of service protection
- Packet shaping to reduce downstream congestion
- 420 Mbps bi-directional data rate
- 500 Kpps bi-directional packet rate
- Production quality firmware
- Host drivers, tools, and EVM reduce development time

Overview

The M27479 is a member of the Traffic Stream Processor (TSP) family of network processors and runs the VoiceMaker firmware application. It is intended for use in Voice over Internet Protocol (VoIP) media gateways to aggregate multiple Comcerto devices, over either POS or Ethernet interfaces. Voice and control plane traffic (from a host processor) are routed to/from the Ethernet system interface(s). The packet filtering and denial of service features provide critical security capabilities for carrier class VoIP media gateways.

Applications

The M27479 network processor and VoiceMaker firmware application are used in conjunction with the Comcerto family of voice processors for carrier class media gateways, DSLAMs, and DLCs. Both POS and Ethernet based aggregation are supported, a POS solution with a PCI attached host is shown in Figure 1.

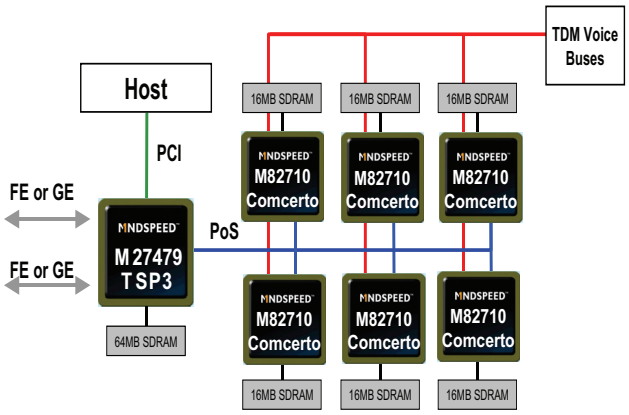

Figure 1: M27479 System Block Diagram

Packet Routing, Filtering, and NAT

Packets are classified based on fields in the Ethernet, IP, and TCP/UDP protocol layers (i.e. layers 2 – 4) using an internal content addressable memory (CAM). Traffic is routed to and from the array of Comcerto devices, a host processor, and the system interface port(s). The CAM architecture also enables configurable packet filtering for security purposes, similar to the capabilities of a firewall. For example, source and destination addresses, TCP/UDP port numbers, and protocol type fields can be examined and verified. Packets containing unexpected values can be discarded to prevent unauthorized traffic. The network address translation (NAT) feature can be used to allow a single IP address to represent the entire array of Comcerto devices to the outside world.

Denial of Service Protection

In addition to packet filtering, which discards packets with unexpected protocol fields, the M27479 can also dramatically limit the effects of unwanted packets received on a valid voice or control flow. This is referred to as a denial of service attack.

Without this protection, unauthorized traffic could flood the receiving gateway preventing proper processing of desirable packets. The M27479 can limit the amount of traffic that is received on a valid voice or control flow, and will discard packets that exceed a configurable rate. Should a valid flow be attacked it will be adversely affected, but the remaining flows will continue to operate normally. In addition, the discard statistics will alert the host processor that an attack is taking place, so that a network administrator can be notified and take appropriate action.

Packet Queuing and Shaping

Egress packets are stored in one of two queues, one for voice and the other for control, signaling, and data packets. To minimize latency on voice traffic the voice queue is serviced to completion before packets from the data queue are sent. Configurable thresholds are provided for each queue, and an alarm is sent to the host if the threshold is crossed. The merged packet stream can be shaped to a configurable rate in order to limit downstream congestion.

Control Architectures

The M27479 is controlled by an external host processor via either the PCI or Ethernet interface. In addition, control traffic for the Comcerto array transits the device transparently.

ATM Features

The VoiceMaker firmware roadmap includes VoATM (i.e. AAL2) and VoIPoAAL5 services running concurrently with the existing VoIPoEthernet service. Either of the two POS interfaces can be configured for UTOPIA mode in order to support ATM. Contact your sales representative for more information on the ATM features.

Software and Development Tools

The M27479 is provided with the VoiceMaker production quality binary firmware application. Host driver reference code is also provided to simplify the development effort.

Also included is the TSP Board Developers Kit (BDK) that provides hardware simulation models (SWIFT and Verilog), test benches, bus functional models, IBIS models, and a reference design. A comprehensive set of diagnostics is provided to assist with chip testing. An evaluation module is available to assist with host software development and testing.

Interfaces

The M27479 can use any combination of two 8/16-bit POS ports, two Ethernet interfaces (100 or 1000 Mbps), and a 32-bit PCI interface for data traffic, see Figure 2. External SDRAM is required for data and context storage. An optional CAM interface is provided for extending the search capabilities, and an optional flash prom interface may be used to load a boot program.

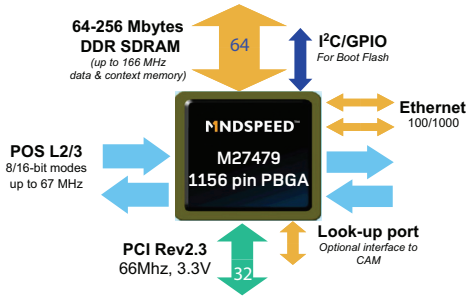

Figure 2: M27479 Interface Diagram

Product Features

General

- POS or Ethernet based Comcerto aggregation
- Packet routing
- Packet filtering
- Network Address Translation (NAT)
- Denial of service protection
- Packet shaping
- Host control via PCI or Ethernet
- Transparent transit of Comcerto control traffic
- Support for local calls (between Comcertos)
- Comprehensive statistics
- Support for Ethernet VLANs
- Redundant Ethernet system interfaces

Performance

- Up to 420 Mbps bi-directional data rate
- Up to 500 Kpps bi-directional packet rate
- Supports full rate bursts over the GE interface

Physical

- Package: 1156 pin PBGA, 35 x 35mm
- Temperature range: -40°C to +85°C
- Power: 5.5W maximum (lower power variations are possible, contact sales for more information)

www.mindspeed.com/salesoffices

General Information: (949) 579-3000

Headquarters – Newport Beach

4000 MacArthur Blvd., East Tower

Newport Beach, CA 92660-3007

M27479-BRF-001-C

© 2005 Mindspeed Technologies, Inc. All rights reserved. Mindspeed and the Mindspeed logo are trademarks of Mindspeed Technologies. All other trademarks are the property of their respective owners. Although Mindspeed Technologies strives for accuracy in all its publications, this material may contain errors or omissions and is subject to change without notice. **This material is provided as is and without any express or implied warranties, including merchantability, fitness for a particular purpose and non-infringement.** Mindspeed Technologies shall not be liable for any special, indirect, incidental or consequential damages as a result of its use.

MINDSPEED
BUILD IT FIRST™