Z-POWER LED Series

Technical Datasheet for X3218X

Z-Power series is designed for high current operation and high flux output applications. Furthermore, its thermal management characteristic is better than other LED Solutions. By package SMD design and good thermal emission material.
According to these advantages, it enables to apply various lighting applications and design solution, automotive lighting, and large size LCD backlight etc.

Features

- Super high Flux output and high Luminance
- Designed for high current operation
- Low thermal resistance
- SMT solderbility
- Lead Free product
- RoHS compliant

Application

- Mobile phone flash
- Automotive interior / exterior lighting
- Automotive signal lighting
- Automotive forward lighting
- General Torch
- Architectural lighting
- LCD TV / Monitor Backlight
- Projector light source
- Traffic signals
- Task lighting
- Decorative / Pathway lighting
- Remote / Solar powered lighting
- Household appliances

Full Code of Z-Power LED Series

Full code form : $X_1 X_2 X_3 X_4 X_5 X_6 - X_7 X_8 - X_9 X_{10} X_{11} X_{12} X_{13}$

1. Part Number

- X_1 : Color
- X_2 : Z-Power LED series number
- X_3 : LENS type
- X_4 : Chip quantity
- X_5 : Package outline size
- X_6 : Type of PCB

2. Internal Number

- X_7
- X_8

3. Code Labeling

- X_9 : Luminous flux (or Radiant flux for royal blue)
- $X_{10} X_{11} X_{12}$: Dominant wavelength (or x,y coordinates rank code)
- X_{13} : Forward voltage

4. Sticker Diagram on Reel & Aluminum Vinyl Bag

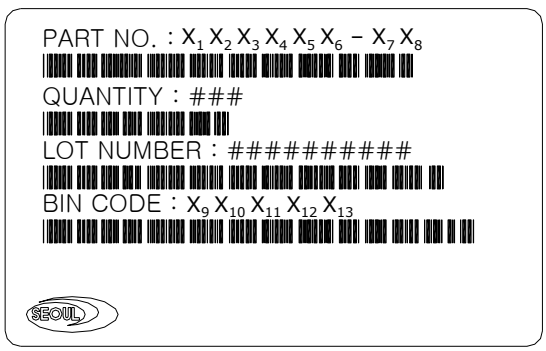

For more information about binning and labeling, refer to the Application Note -1

Outline Dimensions

Dome Type

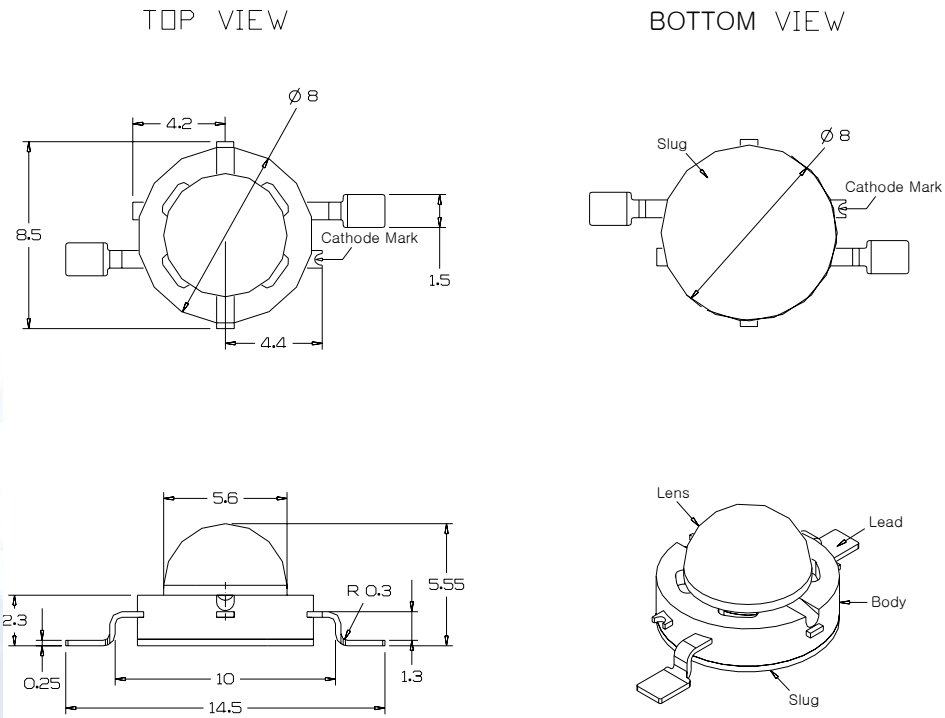

Notes :

1. All dimensions are in millimeters.
2. Scale : none
3. This drawing without tolerances are for reference only
4. Slug of package is connected to anode.

PCB Type Outline Dimensions

Rectangular Type

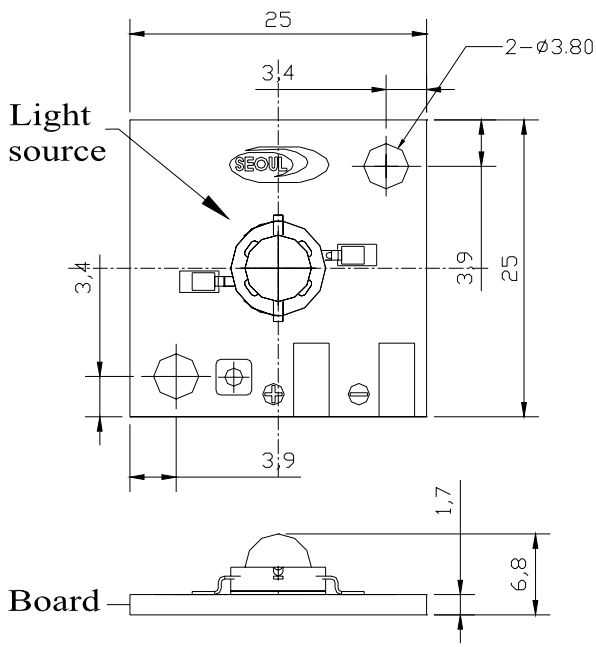

Star Type

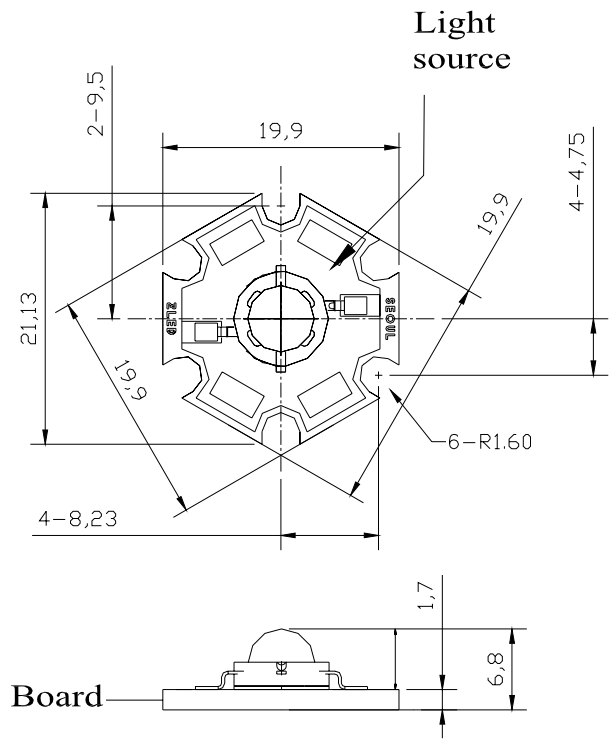

Notes :

1. All dimensions are in millimeters.
2. Scale : none
3. This drawing without tolerances are for reference only

Characteristics for Z-Power LED

1. Pure White

1-1 Electro-Optical characteristics at I_F=350mA, T_A=25ºC

Parameter	Symbol	Value			Unit
		Min	Typ	Max	
Luminous Flux [1]	Φ_V [2]	39	52	-	lm
Correlated Color Temperature [3]	CCT	-	6500	-	K
CRI	R_a	65	70	-	-
Forward Voltage [4]	V_F	3.0	3.5	4.0	V
View Angle	2Θ 1/2	120			deg.
Thermal resistance [5]	RΘ	16			ºC /W

1-2 Absolute Maximum Ratings

Parameter	Symbol	Value	Unit
Forward Current	I_F	0.4	A
Power Dissipation	P_D	1.6	W
Junction Temperature	T_j	125	ºC
Operating Temperature	T_{opr}	-30 ~ +85	ºC
Storage Temperature	T_{stg}	-40 ~ +120	ºC
ESD Sensitivity [6]	-	±20,000V HBM	-

*Notes :

[1] SSC maintains a tolerance of ±10% on flux and power measurements.

[2] Φ_V is the total luminous flux output as measured with an integrating sphere.

[3] CCT ±5% tester tolerance

[4] A tolerance of ±0.06V on forward voltage measurements

[5] RΘ is measured with a SSC metal core pcb.(25 ºC ≤T_J ≤ 110 ºC)
Break voltage of Metal PCB is 6.5kVAC

[6] It is included the zener chip to protect the product from ESD.

*** Caution**

1. Please do not drive at rated current more than 5 sec. without proper heat sink

2. Warm White

2-1 Electro-Optical characteristics at I_F=350mA, T_A=25ºC

Parameter	Symbol	Value			Unit
		Min	Typ	Max	
Luminous Flux [1]	Φ_V [2]	24.5	35	-	lm
Correlated Color Temperature [3]	CCT	-	3000	-	K
CRI [4]	R_a	75	80	-	-
Forward Voltage [5]	V_F	3.0	3.5	4.0	V
View Angle	2Θ 1/2	120			deg.
Thermal resistance [6]	RΘ	16			ºC /W

2-2 Absolute Maximum Ratings

Parameter	Symbol	Value	Unit
Forward Current	I_F	0.4	A
Power Dissipation	P_D	1.6	W
Junction Temperature	T_j	125	ºC
Operating Temperature	T_{opr}	-30 ~ +85	ºC
Storage Temperature	T_{stg}	-40 ~ +120	ºC
ESD Sensitivity [7]	-	±20,000V HBM	-

*Notes :

[1] SSC maintains a tolerance of ±10% on flux and power measurements.

[2] Φ_V is the total luminous flux output as measured with an integrating sphere.

[3] CCT ±5% tester tolerance

[4] A tolerance of ±0.06V on forward voltage measurements

[5] RΘ is measured with a SSC metal core pcb.(25 ºC ≤T_J ≤ 110 ºC)
Break voltage of Metal PCB is 6.5kVAC

[6] It is included the zener chip to protect the product from ESD.

*** Caution**

1. Please do not drive at rated current more than 5 sec. without proper heat sink

3. Royal Blue

3-1 Electro-Optical characteristics at I_F=350mA, T_A=25ºC

Parameter	Symbol	Value			Unit
		Min	Typ	Max	
Radiant Flux [1]	Φ_V [2]	80	255	-	mW
Dominant Wavelength [3]	λ_D	455	460	465	nm
Forward Voltage [4]	V_F	3.0	3.5	4.0	V
View Angle	2Θ 1/2		130		deg.
Thermal Resistance [5]	RΘ		16		ºC /W

3-2 Absolute Maximum Ratings

Parameter	Symbol	Value	Unit
Forward Current	I_F	0.4	A
Power Dissipation	P_D	1.6	W
Junction Temperature	T_j	125	ºC
Operating Temperature	T_{opr}	-30 ~ +85	ºC
Storage Temperature	T_{stg}	-40 ~ +120	ºC
ESD Sensitivity [6]	-	±20,000V HBM	-

*Notes :

[1] SSC maintains a tolerance of ±10% on flux and power measurements. Royal Blue product is binned by radiometric power rather than photometric lumens.

[2] Φ_V is the total luminous flux output as measured with an integrating sphere.

[3] Dominant wavelength is derived from the CIE 1931 Chromaticity diagram. A tolerance of ±0.5nm for dominant wavelength

[4] A tolerance of ±0.06V on forward voltage measurements

[5] RΘ is measured with a SSC metal core pcb.(25 ºC ≤T_J ≤ 110 ºC) Break voltage of Metal PCB is 6.5kVAC

[6] It is included the zener chip to protect the product from ESD.

*** Caution**

1. Please do not drive at rated current more than 5 sec. without proper heat sink

2. Blue power light sources represented here are IEC825 Class 2 for eye safety

4. Blue

4-1 Electro-Optical characteristics at I_F=350mA, T_A=25ºC

Parameter	Symbol	Value			Unit
		Min	Typ	Max	
Luminous Flux [1]	Φ_V [2]	6	11	-	lm
Dominant Wavelength [3]	λ_D	455	460	475	nm
Forward Voltage [4]	V_F	3.0	3.5	4.0	V
View Angle	2Θ 1/2	130			deg.
Thermal Resistance [5]	RΘ	16			ºC /W

4-2 Absolute Maximum Ratings

Parameter	Symbol	Value	Unit
Forward Current	I_F	0.4	A
Power Dissipation	P_D	1.6	W
Junction Temperature	T_j	125	ºC
Operating Temperature	T_{opr}	-30 ~ +85	ºC
Storage Temperature	T_{stg}	-40 ~ +120	ºC
ESD Sensitivity [6]	-	±20,000V HBM	-

*Notes :

[1] SSC maintains a tolerance of ±10% on flux and power measurements.

[2] Φ_V is the total luminous flux output as measured with an integrating sphere.

[3] Dominant wavelength is derived from the CIE 1931 Chromaticity diagram.
A tolerance of ±0.5nm for dominant wavelength

[4] A tolerance of ±0.06V on forward voltage measurements

[5] RΘ is measured with a SSC metal core pcb.(25 ºC ≤T_J ≤ 110 ºC)
Break voltage of Metal PCB is 6.5kVAC

[6] It is included the zener chip to protect the product from ESD.

*** Caution**

1. Please do not drive at rated current more than 5 sec. without proper heat sink

2. Blue power light sources represented here are IEC825 Class 2 for eye safety

5. Cyan

5-1 Electro-Optical characteristics at I_F=350mA, T_A=25ºC

Parameter	Symbol	Value			Unit
		Min	Typ	Max	
Luminous Flux [1]	Φ_V [2]	24.5	40	-	lm
Dominant Wavelength [3]	λ_D	500	505	510	nm
Forward Voltage [4]	V_F	3.0	3.5	4.0	V
View Angle	2Θ 1/2		130		deg.
Thermal Resistance [5]	RΘ		16		ºC /W

5-2 Absolute Maximum Ratings

Parameter	Symbol	Value	Unit
Forward Current	I_F	0.4	A
Power Dissipation	P_D	1.6	W
Junction Temperature	T_j	125	ºC
Operating Temperature	T_{opr}	-30 ~ +85	ºC
Storage Temperature	T_{stg}	-40 ~ +120	ºC
ESD Sensitivity [6]	-	±20,000V HBM	-

*Notes :

[1] SSC maintains a tolerance of ±10% on flux and power measurements.

[2] Φ_V is the total luminous flux output as measured with an integrating sphere.

[3] Dominant wavelength is derived from the CIE 1931 Chromaticity diagram.
A tolerance of ±0.5nm for dominant wavelength

[4] A tolerance of ±0.06V on forward voltage measurements

[5] RΘ is measured with a SSC metal core pcb.(25 ºC ≤T_J ≤ 110 ºC)
Break voltage of Metal PCB is 6.5kVAC

[6] It is included the zener chip to protect the product from ESD.

*** Caution**

1. Please do not drive at rated current more than 5 sec. without proper heat sink

6. Green

6-1 Electro-Optical characteristics at I_F=350mA, T_A=25ºC

Parameter	Symbol	Value			Unit
		Min	Typ	Max	
Luminous Flux [1]	Φ_V [2]	24.5	48	-	lm
Dominant Wavelength [3]	λ_D	520	527	535	nm
Forward Voltage [4]	V_F	3.0	3.5	4.0	V
View Angle	2Θ 1/2	130			deg.
Thermal Resistance [5]	RΘ	16			ºC /W

6-2 Absolute Maximum Ratings

Parameter	Symbol	Value	Unit
Forward Current	I_F	0.4	A
Power Dissipation	P_D	1.6	W
Junction Temperature	T_j	125	ºC
Operating Temperature	T_{opr}	-30 ~ +85	ºC
Storage Temperature	T_{stg}	-40 ~ +120	ºC
ESD Sensitivity [6]	-	±20,000V HBM	-

*Notes :

[1] SSC maintains a tolerance of ±10% on flux and power measurements.

[2] Φ_V is the total luminous flux output as measured with an integrating sphere.

[3] Dominant wavelength is derived from the CIE 1931 Chromaticity diagram.
A tolerance of ±0.5nm for dominant wavelength

[4] A tolerance of ±0.06V on forward voltage measurements

[5] RΘ is measured with a SSC metal core pcb.(25 ºC ≤T_J ≤ 110 ºC)
Break voltage of Metal PCB is 6.5kVAC

[6] It is included the zener chip to protect the product from ESD.

*** Caution**

1. Please do not drive at rated current more than 5 sec. without proper heat sink

7. Amber

7-1 Electro-Optical characteristics at I_F=350mA, T_A=25ºC

Parameter	Symbol	Value			Unit
		Min	Typ	Max	
Luminous Flux [1]	Φ_V [2]	24.5	38	-	lm
Dominant Wavelength [3]	λ_D	585	590	595	nm
Forward Voltage [4]	V_F	2.0	2.5	3.0	V
View Angle	2Θ 1/2		128		deg.
Thermal Resistance [5]	RΘ		19		ºC /W

7-2 Absolute Maximum Ratings

Parameter	Symbol	Value	Unit
Forward Current	I_F	0.4	A
Power Dissipation	P_D	1.2	W
Junction Temperature	T_j	100	ºC
Operating Temperature	T_{opr}	-30 ~ +85	ºC
Storage Temperature	T_{stg}	-40 ~ +120	ºC
ESD Sensitivity [6]	-	±20,000V HBM	-

*Notes :

[1] SSC maintains a tolerance of ±10% on flux and power measurements.

[2] Φ_V is the total luminous flux output as measured with an integrating sphere.

[3] Dominant wavelength is derived from the CIE 1931 Chromaticity diagram.
A tolerance of ±0.5nm for dominant wavelength

[4] A tolerance of ±0.06V on forward voltage measurements

[5] RΘ is measured with a SSC metal core pcb.(25 ºC ≤T_J ≤ 110 ºC)
Break voltage of Metal PCB is 6.5kVAC

[6] It is included the zener chip to protect the product from ESD.

*** Caution**

1. Please do not drive at rated current more than 5 sec. without proper heat sink

8. Red

8-1 Electro-Optical characteristics at I_F=350mA, T_A=25ºC

Parameter	Symbol	Value			Unit
		Min	Typ	Max	
Luminous Flux [1]	Φ_V [2]	24.5	30	-	lm
Dominant Wavelength [3]	λ_D	618	625	632	nm
Forward Voltage [4]	V_F	2.0	2.5	3.0	V
View Angle	2Θ 1/2		130		deg.
Thermal Resistance [5]	RΘ		19		ºC /W

8-2 Absolute Maximum Ratings

Parameter	Symbol	Value	Unit
Forward Current	I_F	0.4	A
Power Dissipation	P_D	1.2	W
Junction Temperature	T_j	100	ºC
Operating Temperature	T_{opr}	-30 ~ +85	ºC
Storage Temperature	T_{stg}	-40 ~ +120	ºC
ESD Sensitivity [6]	-	±20,000V HBM	-

*Notes :

[1] SSC maintains a tolerance of ±10% on flux and power measurements.

[2] Φ_V is the total luminous flux output as measured with an integrating sphere.

[3] Dominant wavelength is derived from the CIE 1931 Chromaticity diagram.
A tolerance of ±0.5nm for dominant wavelength

[4] A tolerance of ±0.06V on forward voltage measurements

[5] RΘ is measured with a SSC metal core pcb.(25 ºC ≤T_J ≤ 110 ºC)
Break voltage of Metal PCB is 6.5kVAC

[6] It is included the zener chip to protect the product from ESD.

*** Caution**

1. Please do not drive at rated current more than 5 sec. without proper heat sink

White color Spectrum, T_A=25ºC

1. Pure White

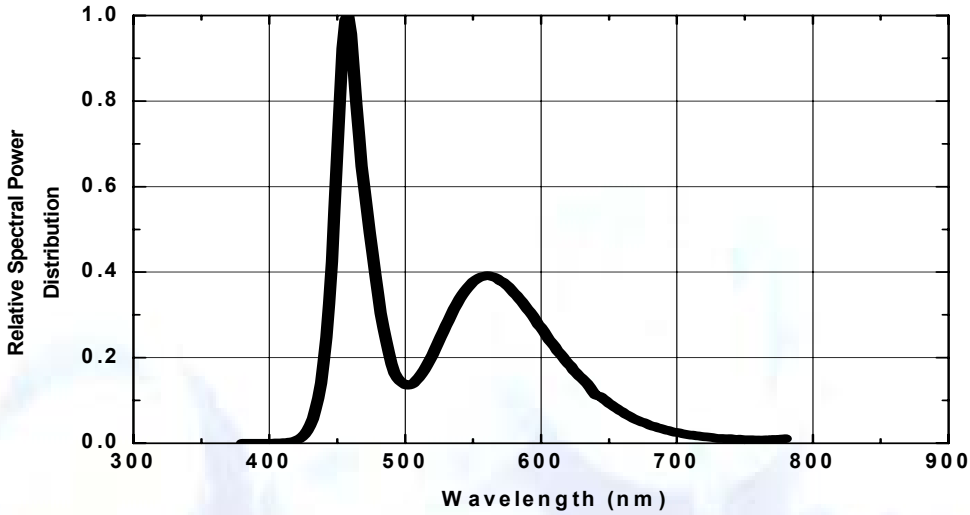

2. Warm White

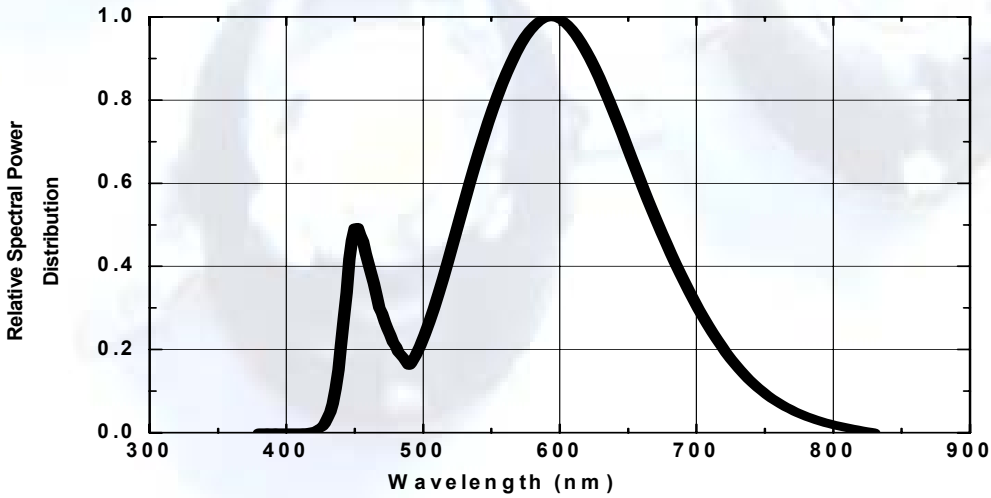

3. Blue, Cyan, Green, Amber, Red

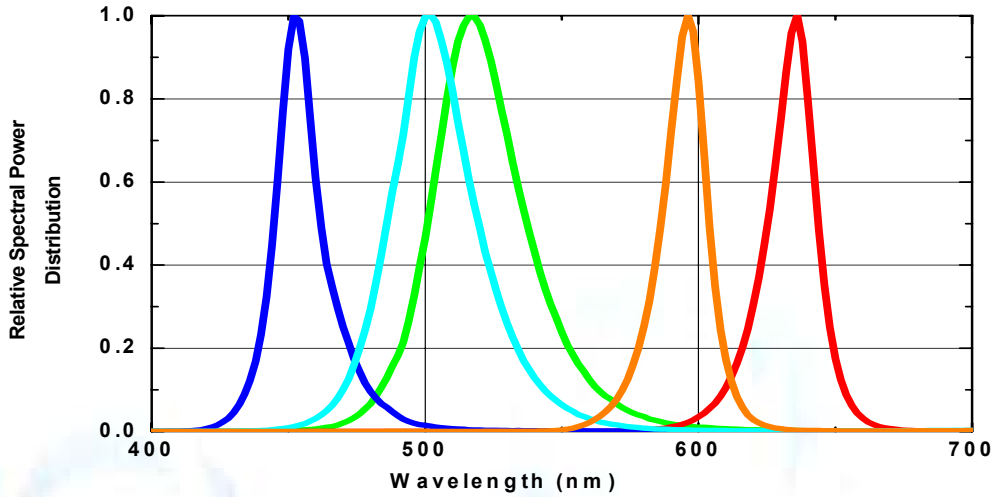

Light Output Characteristics

1. Relative Light Output vs. Junction Temperature at I_F=350mA, T_A=25℃

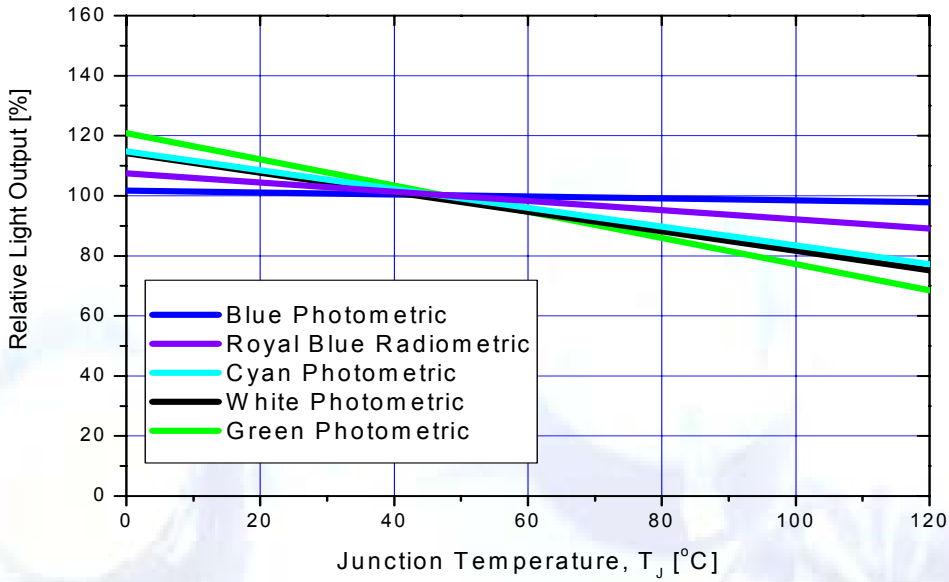

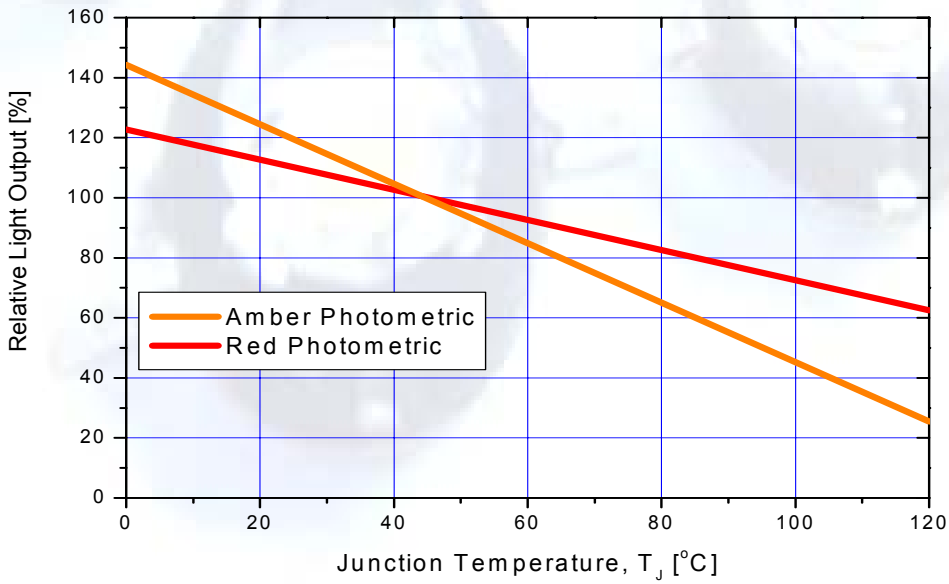

Forward Current Characteristics

1. Forward Voltage vs. Forward Current, T_A=25℃

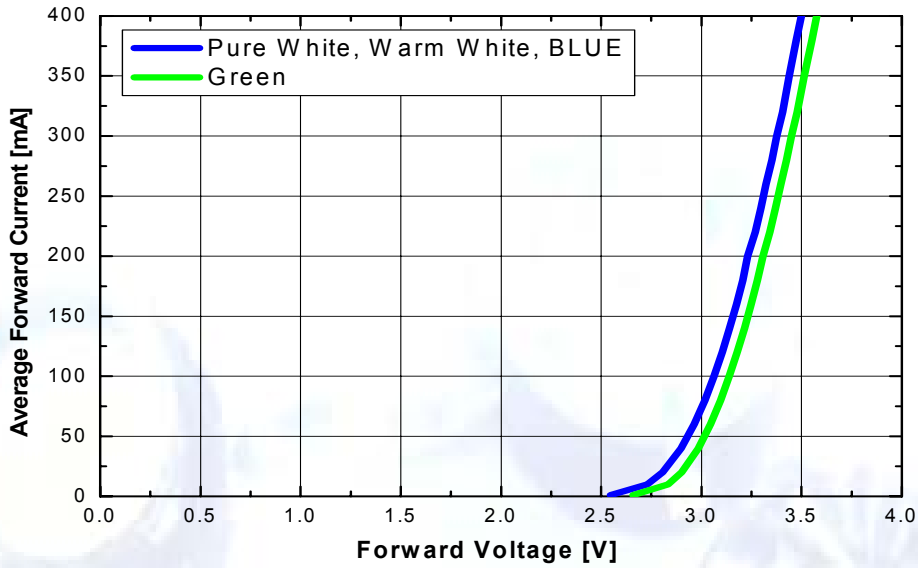

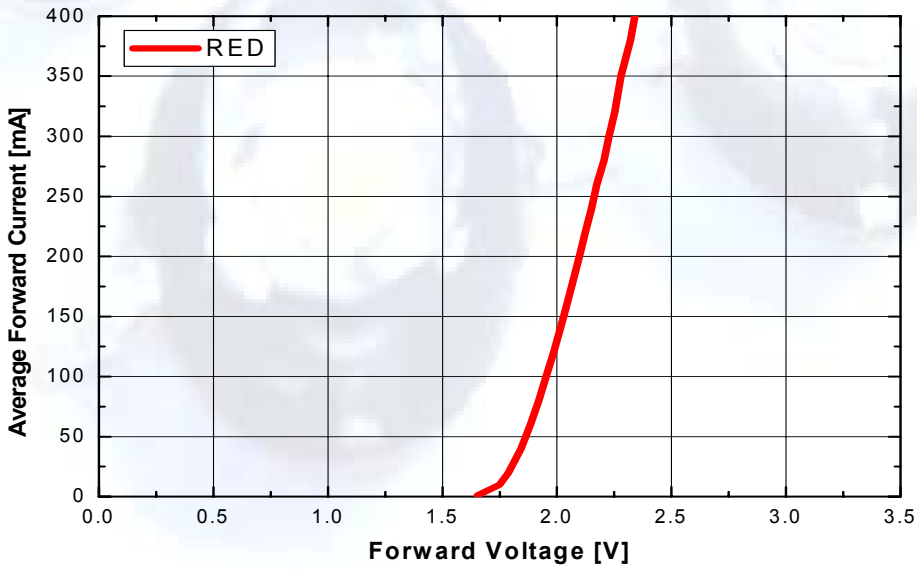

2. Forward Current vs. Normalized Relative Luminous Flux, T_A=25℃

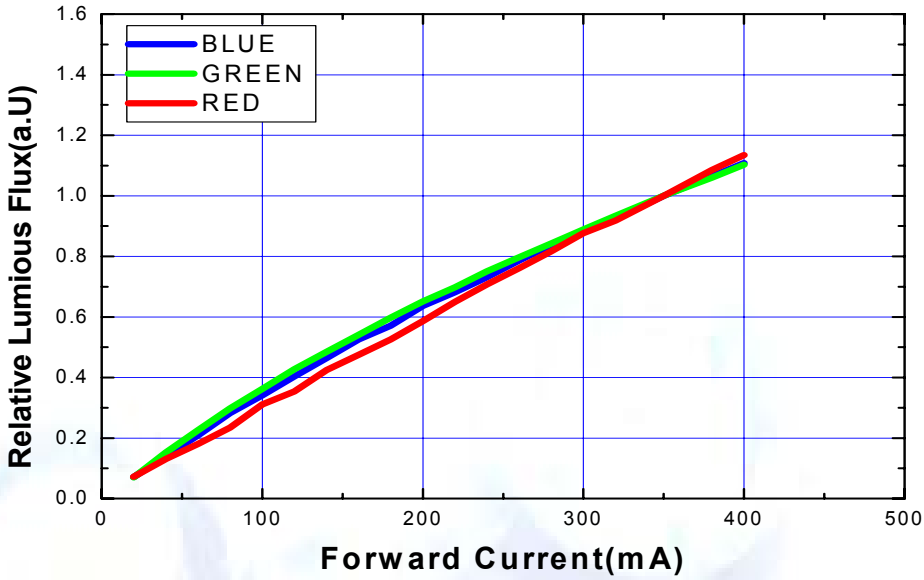

3. Forward Current Vs Wavelength shift, T_A=25℃

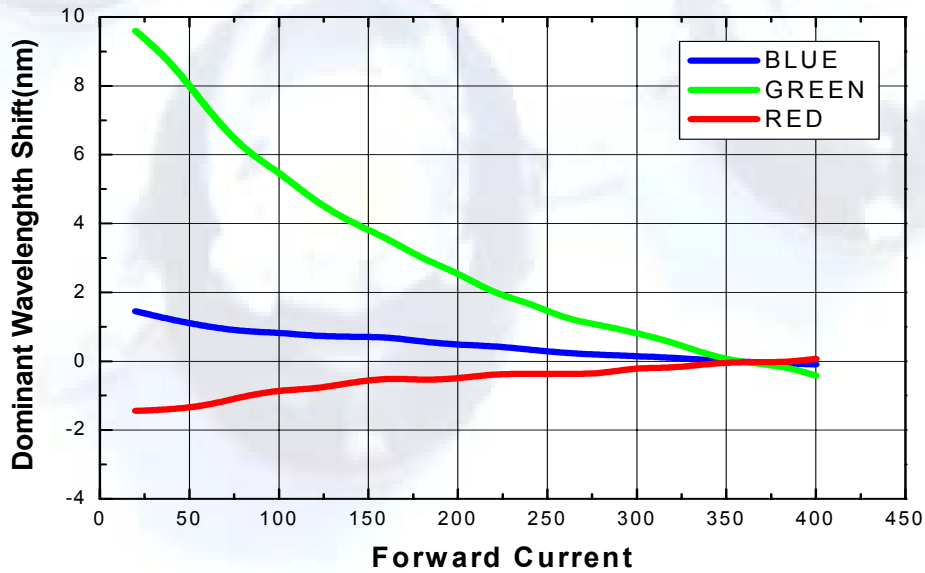

Ambient Temperature vs Allowable Forward Current

1. Pure White, Warm White, Royal Blue, Blue, Cyan, Green (T_{JMAX} = 125 °C)

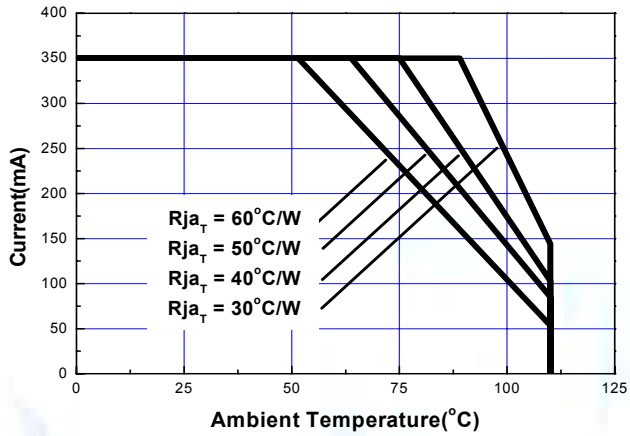

2. Amber, Red (T_{JMAX} = 100 °C)

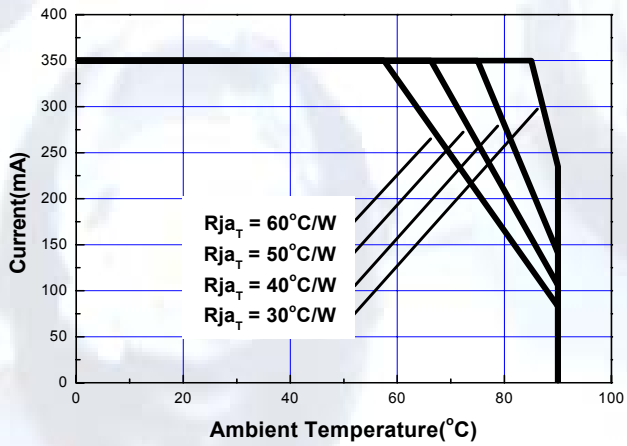

Typical Dome Type Radiation pattern

1. Pure White, Warm White

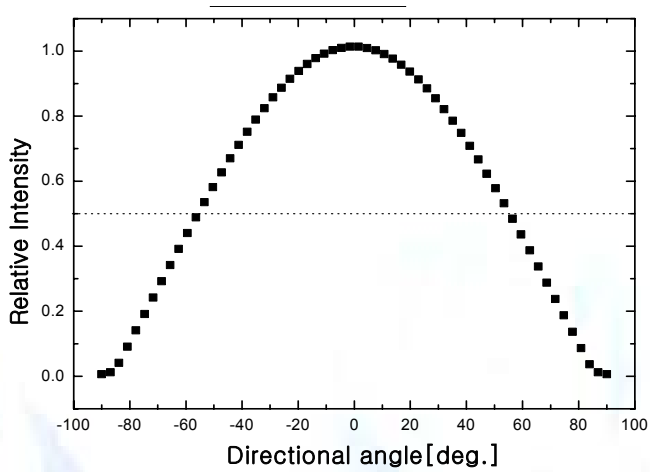

2. Royal Blue, Blue, Cyan, Green

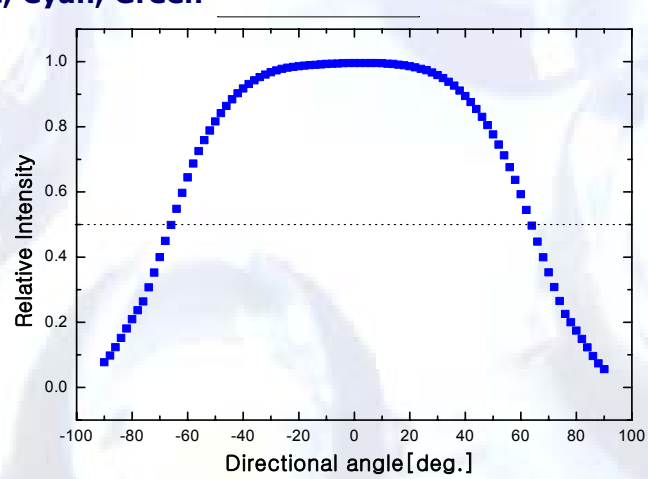

3. Amber, Red

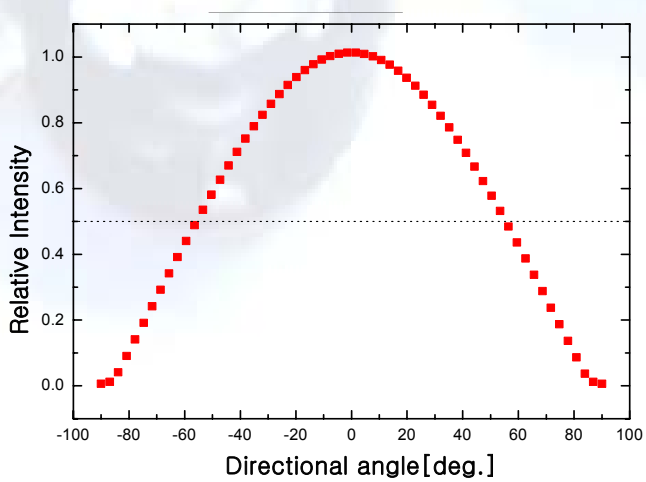

Recommended Solder pad

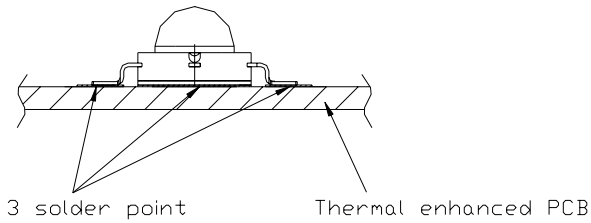

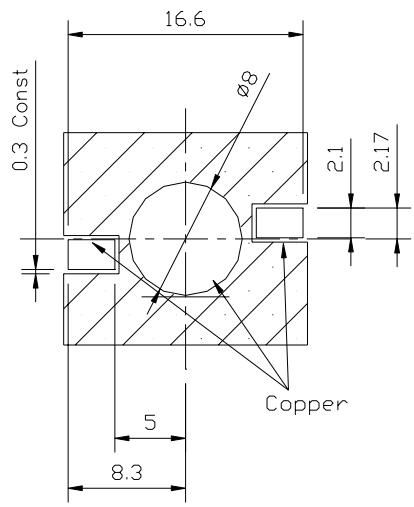

<Footprint & Solder pad>

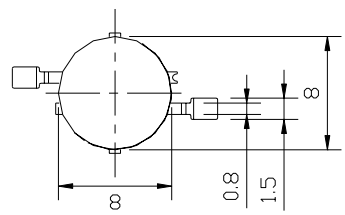

<Rear view>

Note :

1. All dimensions are in millimeters
2. Scale none
3. This drawing without tolerances are for reference only

Soldering Profile

1. Reflow Soldering Conditions / Profile

Preliminary heating to be at 180℃max. for 2 minutes max. Soldering heat to be at 260℃max. for 5 seconds max.

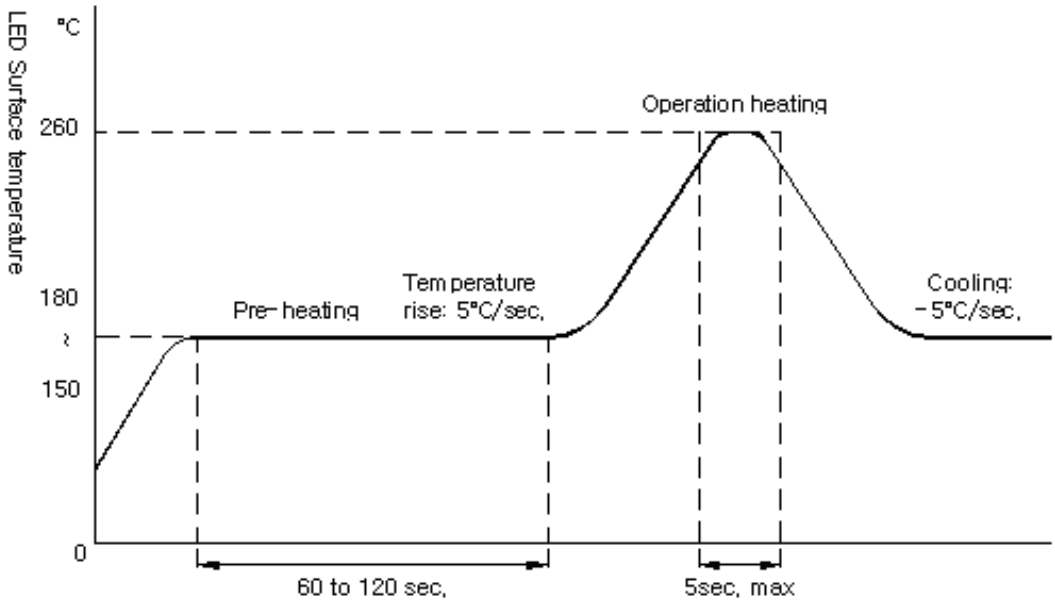

2. Hand Soldering conditions

Lead : Not more than 3 seconds @MAX280℃
Slug : Use a thermal-adhesives

*** Caution**

No second soldering recommended

Rectangular Type Reel Packaging - Rectangular type

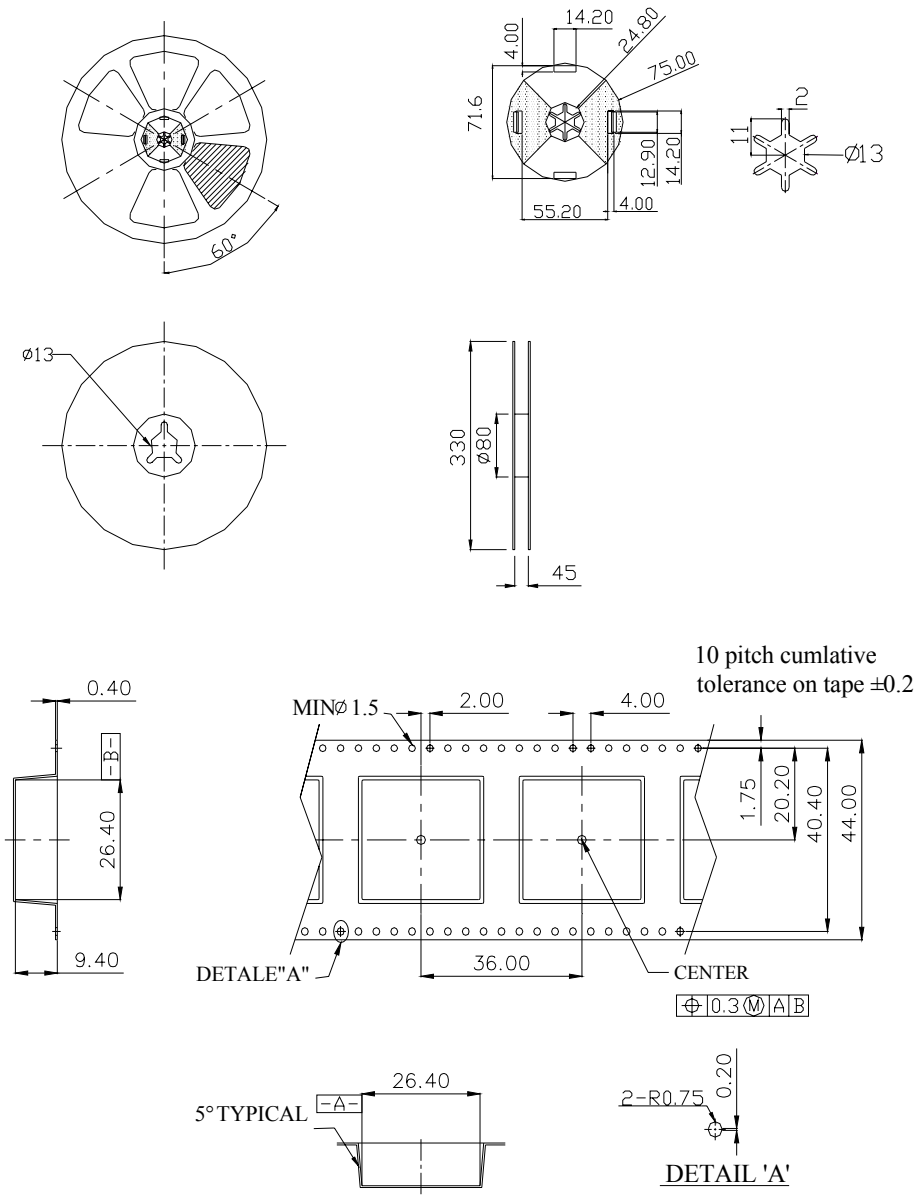

Note :

1. The number of loaded products in the reel is 200ea
2. All dimensions are in millimeters
3. Scale none
4. This drawing without tolerances are for reference only

Rectangular Type Reel Packaging - Star type

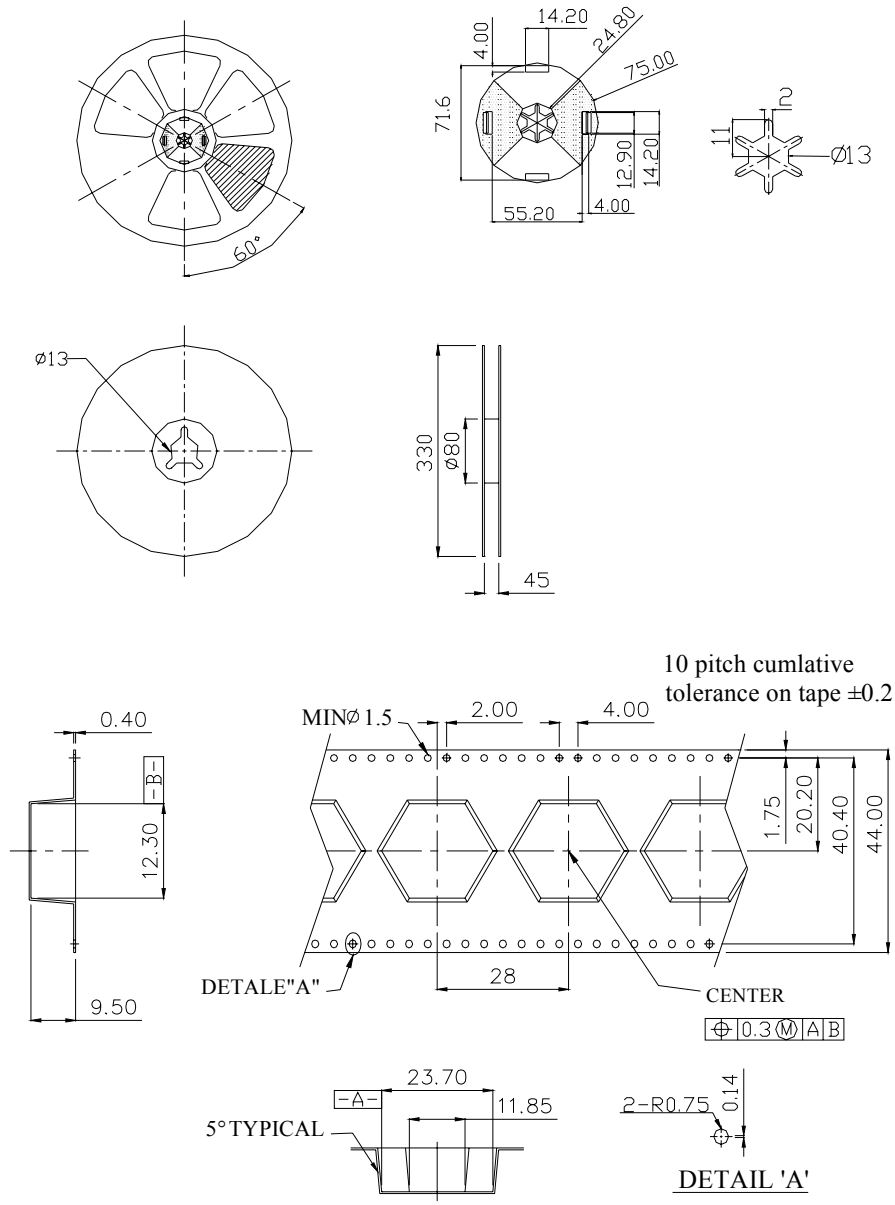

Note :

1. The number of loaded products in the reel is 350ea
2. All dimensions are in millimeters
3. Scale none
4. This drawing without tolerances are for reference only

Precaution for use

- Storage
  In order to avoid the absorption of moisture, it is recommended to store in the dry box (or desiccator) with a desiccant . Otherwise, to store them in the following environment is recommended. Temperature : 5℃~30℃ Humidity : 60%HR max.
- Attention after opened
  However LED is correspond SMD, when LED be soldered dip, interfacial separation may affect the light transmission efficiency, causing the light intensity to drop. Attention in followed.
  a. After opened and mounted, the soldering shall be quickly.
  b. Keeping of a fraction
  Temperature : 5 ~ 40℃ Humidity : less than 30%
- In case of more than 1 week passed after opening or change color of indicator on desiccant components shall be dried 10-12hr. at 60±5℃.
- In case of supposed the components is humid, shall be dried dip-solder just before. 100Hr at 80±5℃ or 12Hr at 100±5℃.
- Any mechanical force or any excess vibration shall not be accepted to apply during cooling process to normal temp. after soldering.
- Quick cooling shall avoid.
- Components shall not be mounted on warped direction of PCB.
- Anti radioactive ray design is not considered for the products listed here in.
- Gallium arsenide is used in some of the products listed in this publication. These products are dangerous if they are burned or smashed in the process of disposal. It is also dangerous to drink the liquid or inhale the gas generated by such products when chemically disposed.
- This device should not be used in any type of fluid such as water, oil, organic solvent and etc. When washing is required, IPA should be used.
- When the LEDs are illuminating, operating current should be decided after considering the package maximum temperature.
- LEDs must be stored to maintain a clean atmosphere. If the LEDs are stored for 3 months or more after being shipped from SSC, a sealed container with a nitrogen atmosphere should be used for storage.
- The LEDs must be soldered within seven days after opening the moisture-proof packing.
- Repack unused products with anti-moisture packing, fold to close any opening and then store in a dry place.
- The appearance and specifications of the product may be modified for improvement without notice.
- Long time exposure of sunlight or UV occasions discolorment of PKG
- Break voltage of Metal PCB is 6.5kVAC

Handling of Silicone resin LEDs

Z-Power LED is encapsulated by silicone resin for the highest flux efficiency.
Notes for handling of Silicone resin Z-Power LEDs

- Avoid touching silicone resin parts especially by sharp tools such as Pincette(Tweezers)
- Avoid leaving fingerprints on silicone resin parts.
- Dust sensitivity silicone resin need containers having cover for storage.
- When populating boards in SMT production, there are basically no restrictions regarding the form of the pick and place nozzle, except that mechanical pressure on the surface of the resin must be prevent. This is assured by choosing a pick and place nozzle which is larger than the LEDs silicone resin area
- Please do not force over 3000 gf impact or pressure diagonally on the silicon lens. It will cause fatal damage of this product