Power LED III

Mühlgasse 86-88 • A-2380 Perchtoldsdorf • Austria
Tel: +43 1 86 305 - 0 • Fax: +43 1 86 305 - 98
e-mail: office@codico.com • www.codico.com

SSC

2005. 03.21

Background for development

- Need second lens!
- Need Round type!
- Need Side emitter lens!
- Need Smaller!

Outline dimension

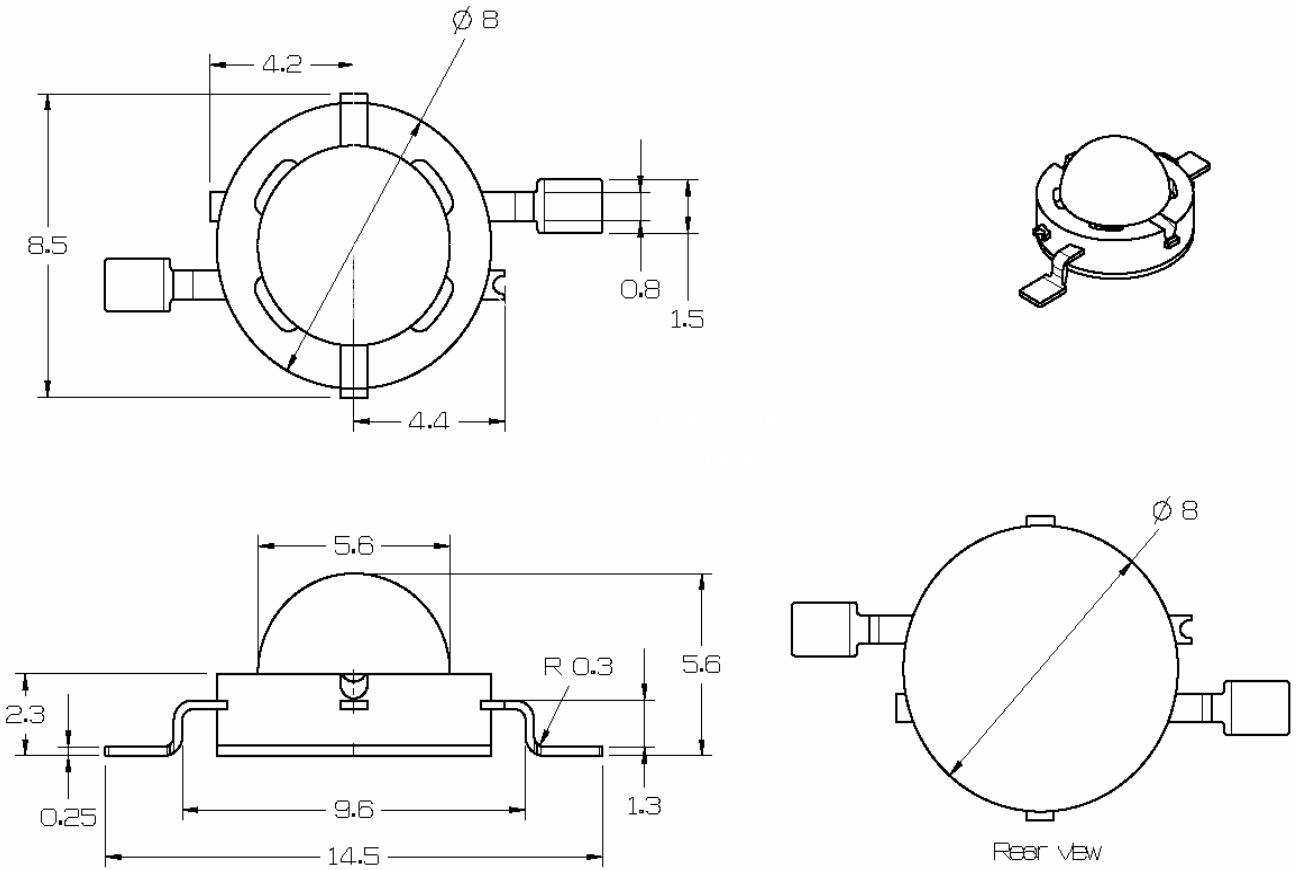

Structure/ Patent

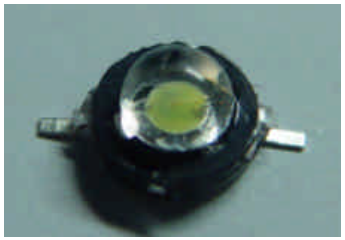

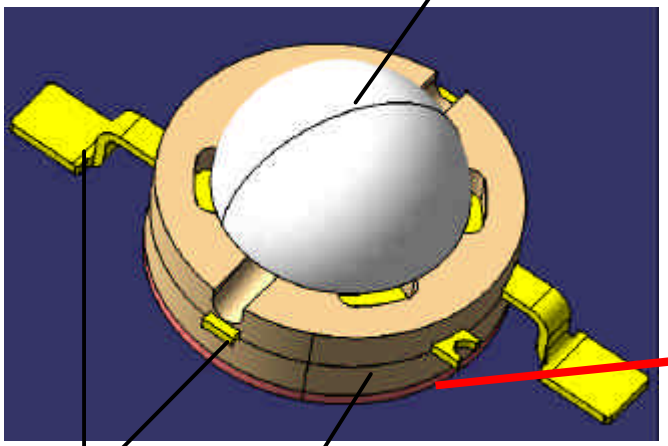

Optical Characteristic

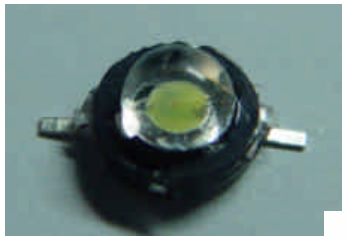

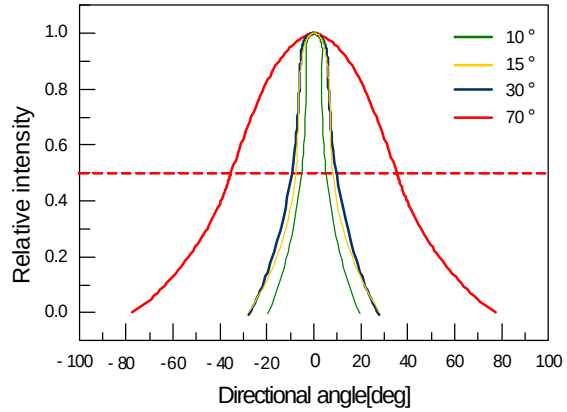

<10°/ 15° /30 ° /70 °>

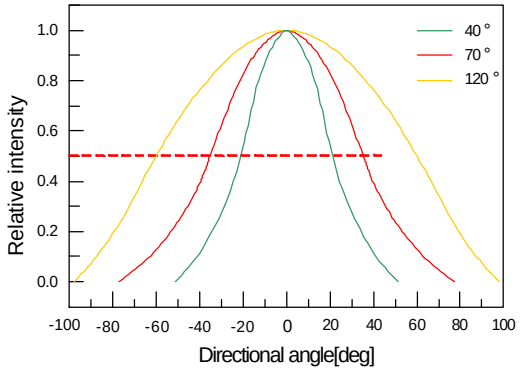

<40 ° /70 ° /120 ° >

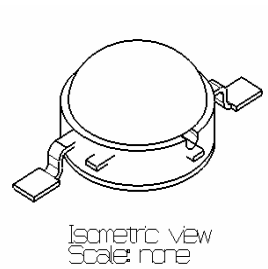

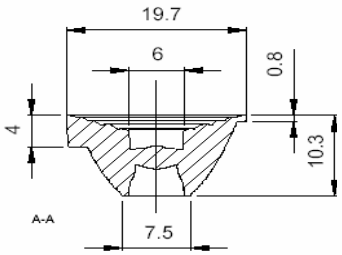

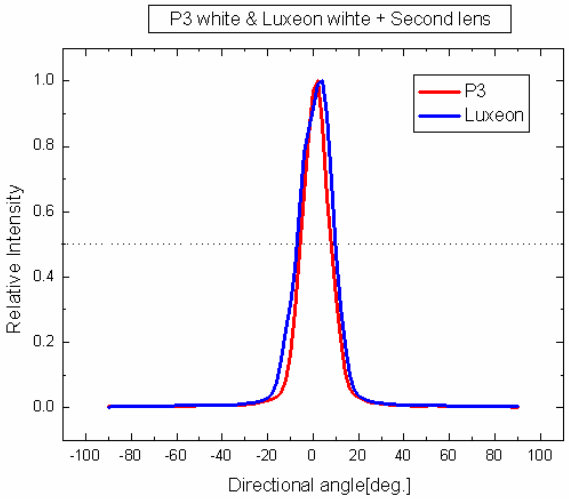

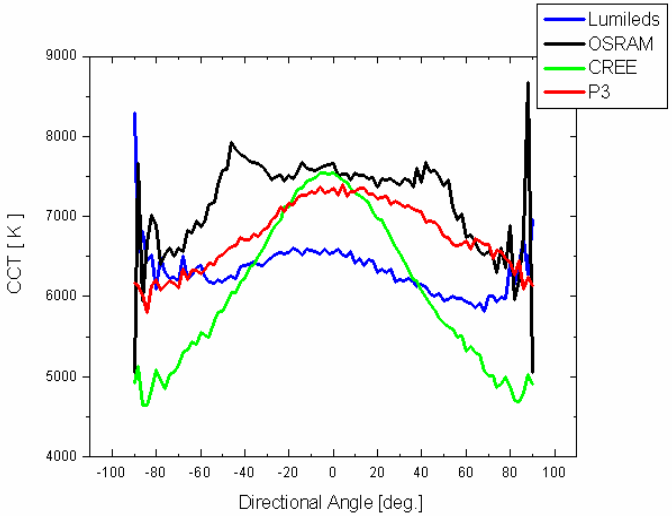

Colour variation over pattern – white

-

LumiLEDs : ~ 400K,SSC : ~ 900K

Osram : ~1200K, Cree: ~ 2000K)

Electric - Characteristic

Various package type (rectangular / round) make your product design more flexible.

Round shape – P3 series, world wide standard type.

Electro-Optical Characteristics (at I_F=350 mA, T_A=25 °C)

Color	Luminous intensity[cd]			Luminous Flux [lm]	Wavelength l_D[nm] /CIE[X, Y]	Forward Voltage V_F [V]
	10 °	30°	45 °	120°		
	800	120	60	30	625	2.5
	700	100	50	48	527	3.5
	250	50	25	10	460	3.5
	750	120	60	25	590	2.5
	700	100	50	29	505	4.0
	700	100	50	60	0.31,0.31	3.5

[note] This specification is measured using by 2nd lens (Collimator)

Optical Characteristic

Revolution in illumination

Various color temperatures(CCT) are available

Electro-Optical Characteristics

Color	1W I_F=350mA				2.5 W I_F=700mA				5 W I_F=1,400mA			
	Luminous Flux F [lm]	CCT [K]	CRI	Viewing Angle [°]	Luminous Flux F [lm]	CCT [K]	CRI	Viewing Angle $2q_{1/2}$[°]	Luminous Flux F [lm]	CCT [K]	CRI	Viewing Angle $2q_{1/2}$[°]
White	44 48 62 40	10,000K 8,000K 6,500K 3,300K	76	120	75 85 110 70	10,000K 8,000K 6,500K 3,300K	76	120	130 145 200 120	10,000K 8,000K 6,500K 3,300K	76	120

Comparison P1 – P3

		P1			P3						
		1W	2.5W	5W	1W						
Package Characteristics	W(0.32,0.32) lm	60	90	160	60						
	G (525nm)Lm	48	80	155	48						
	B(460nm) lm	10	15	29	10						
	R(630nm) lm	35	48	90	35						
	Warm white	35	70	120	35						
	Full-color(W) lm	-	60	-	-						
	Chip Qty'	1	2	4	1						
	IF (mA)	350	700	1400	350						
	VF (V)	3.4	3.4	3.4	3.4						
	Size(mm)	9 X 9	9 X 9	9 X 9	8pi						

Z - POWER

		Z – POWER LED			
Output spec.	CCT	3000K ~ 8000K			
	V/CCT	150K			
	CRI	75 ~79(80@3300K)			
	R? j-b	16~19 ? /W			
	Radiation	120 , 70, Side-emitter			
	Color	R, G, B, W Full-color (3in1)			
	ESD(HBM)	20,000V			
	Reliability	1W : 70,000 hr(-50%) 2.5W:50,000 hr(-50%) 5W:25,000 hr(-50%)			
Etc.	SMT	OK (3 Point)			
	Cost	5~10¢ /lm ,Compared to 0.5¢ /lm for incandescent and 4¢ /lm for compact fluorescent			

Roadmap

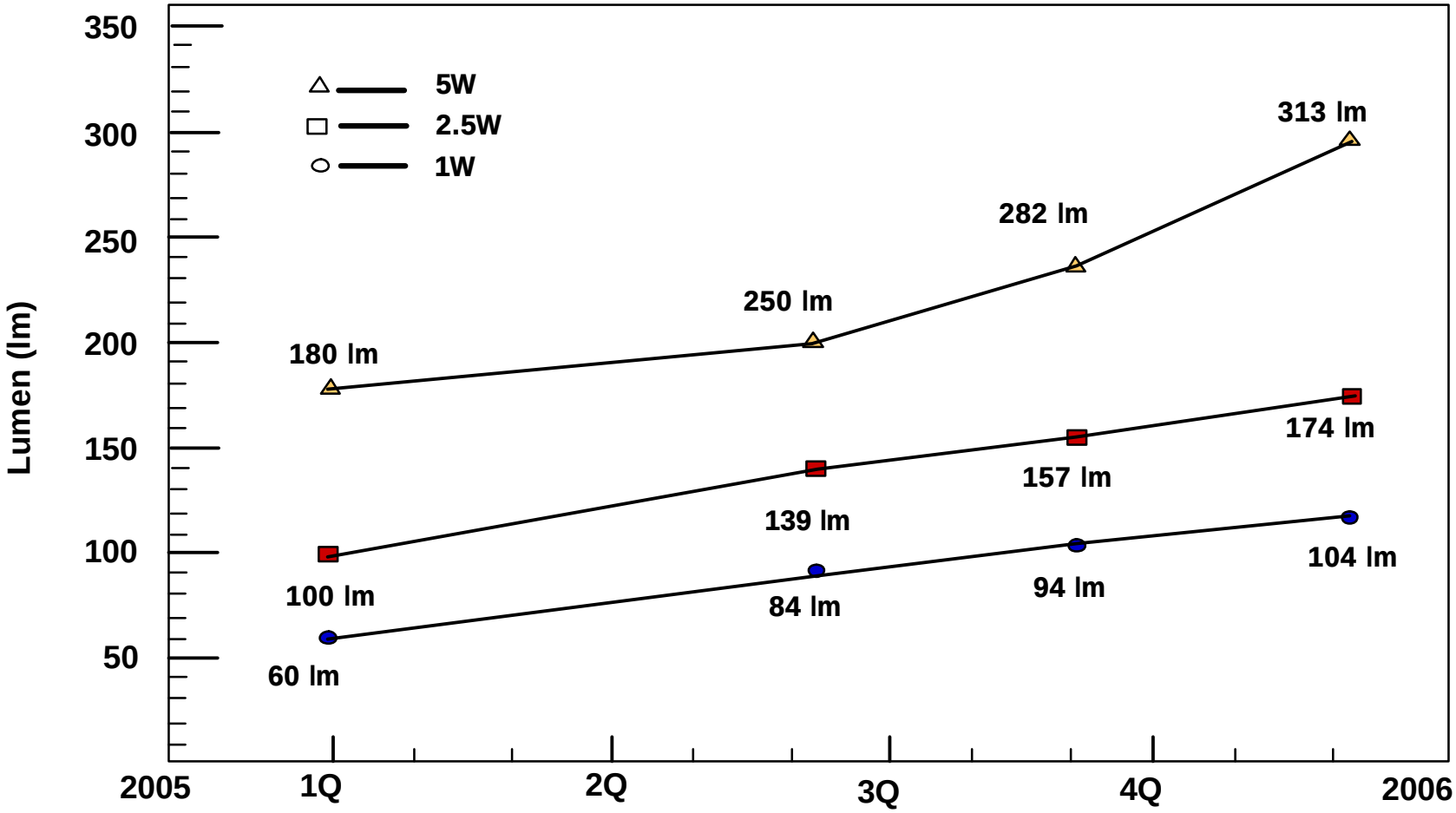
350
300
250
200
150
100
50
Lumen (lm)
5W
2.5W
1W
180 lm
250 lm
282 lm
313 lm
100 lm
139 lm
157 lm
174 lm
60 lm
84 lm
94 lm
104 lm
2005
1Q
2Q
3Q
4Q
2006