ModemModule

Embedded Modem + Internet Applications

Benefits

Complete, ready-to-integrate Internet modem

Built-in FTP, telnet, POP3 and SMTP clients

Built-in Web server

Global compliance

The Multi-Tech ModemModule IP creates Internet-ready devices by integrating V.92/56K modem functionality and a complete TCP/IP protocol stack into a single product design. The space efficient (1" x 3"), ready-to-integrate embedded modem sends and receives data, voice and images via e-mail, HTTP or socket interfaces. ModemModule IP brings Internet connectivity to any device without adding development time and costs. ModemModule IP also complies with telecom requirements globally allowing for worldwide shipments.

Enables Any Device to Send and Receive Data via the Internet

Features

- Extended AT command set for IP configuration and embedded programming
- Low-cost processor runs the PPP, LCP, IPCP, IP UDP, TCP, DNS, SMTP, POP3 and HTTP protocols
- Binary Base 64 encoding and MIME
- Open up to 5 TCP or UDP sockets
- PAP, CHAP or Script authentication
- Web Server supports multiple HTML web pages
- HTTP version 1.0 and 1.1 support
- Provides a natural firewall by not allowing IP packets to be passed to the host system
- Integrates the controller, data pump and data access arrangement (DAA) in one module
- V.92/56K data rates
- Serial interface supports DTE speeds to 230.4K bps
- Central site setup and control of the remote modem modules
- TIA-602 AT command compatible
- Global approvals with a single module design
- Flash memory to update firmware with the latest enhancements

MultiTech® Systems

Highlights

Applications. With connect rates from 300 to 56,000 bits per second (bps), the ModemModule IP is targeted at applications that periodically need to send or receive data over the Internet. It is an ideal solution for:

- Industrial and medical remote monitoring systems
- Remote diagnostics
- Remote metering
- Point-of-sale terminals
- ATM terminals
- Credit card and check verification systems
- Data collection
- Ticketing machines
- Security systems
- Gas pumps
- Television set-top boxes
- Vending/gaming machines
- Appliances

Internet-enable Any Device. ModemModule IP embeds Internet connectivity inside commercial, personal and industrial devices at a minimal cost. Using the embedded Internet protocols, it sends and receives data over the Internet without connecting to a PC or a gateway server. It can also serve a single web page in response to a web browser request.

Sending and Receiving Data. ModemModule IP initiates an ISP connection upon command from the host device. Using the embedded Internet protocols, it then executes commands to dial, login, authenticate, communicate and sign off with the ISP. If a line to the ISP is unavailable, ModemModule IP can function as a regular modem and send the data over a phone line, bypassing the IP features.

Real-time Data Transfer. ModemModule IP achieves the industry's fastest analog data transfers at V.92/56K speeds. It also provides V.44 and V.42bis data compression and V.42 error correction to shorten transfer time and ensure data is sent error-free. In addition, ModemModule IP provides industry-standard AT-style commands for ease of integration into existing software applications.

Integration Reduces Space, Power and Cost. ModemModule IP integrates the controller, data pump and data access arrangement (DAA) as well as the IP stack in one module. This integration requires low power, low real estate, and provides an overall reduction in costs.

Reduces Development Time. ModemModule IP can make an existing device Internet-ready without requiring significant hardware changes to its design. It actually provides faster time-to-market because it relieves the burden and expense of writing Internet application code as well as modem controller code, allowing system designers to focus on developing the device's core features.

Mechanical Specifications

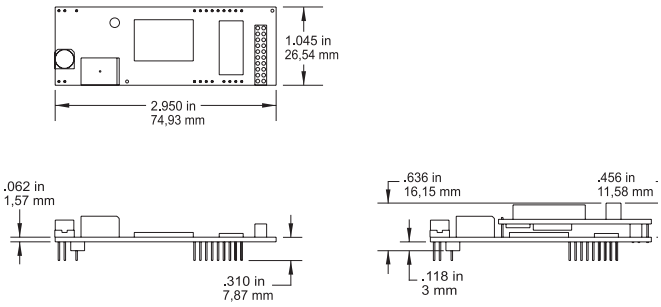

ModemModule Pin-out. ModemModule IP interfaces easily with existing devices through a standard serial interface. A simple programming interface between the device application and ModemModule IP activates the powerful Internet connectivity functions.

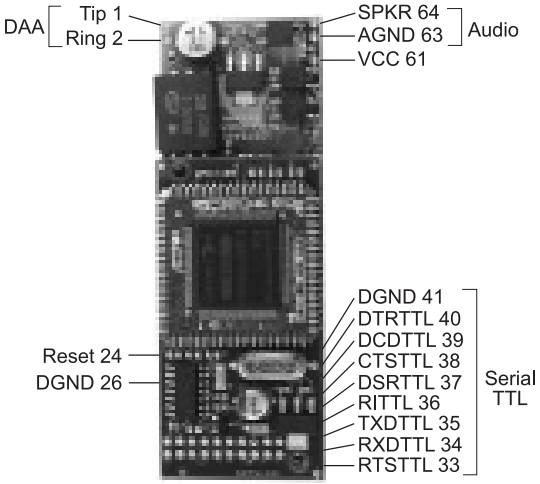

Global Compliance. ModemModule IP has successfully completed international compliance testing (homologation) for global approval. This means one module can be specified per design without having to integrate specific country approved modules for each system used across the world.

Firmware Upgrades. ModemModule IP also features flash memory to allow for firmware updates. These upgrades allow the user to stay current with the latest enhancements that Multi-Tech has to offer.

Developer's Kit. The ModemModule IP Developer's Kit provides the ability to plug in the modem/IP module and use it for testing, programming and evaluation. The kit includes one development board with RS-232 DB-25 connector, wall power adapter, RJ-11 jack and RS-232 cable.

Who's Multi-Tech? Success is about communication. Multi-Tech is about making it easier. We create better ways of sharing information – remotely and over the Internet. Multi-Tech solutions set the standard for efficient and effective communication in an information-hungry age. Our products are known for their reliability, performance and flexibility. With Internet access, remote access and telephony products, Multi-Tech is creating a world where technically, everything's possible.

Specifications

Telecom Certifications*

US (FCC Part 68)
Canada (CS03)
Austria (R&TTE)
Argentina
Australia
Belgium (R&TTE)
Brazil
Chile
China
Cyprus (R&TTE)
Denmark (R&TTE)
Finland (R&TTE)
France (R&TTE)
Germany (R&TTE)
Greece (R&TTE)
Hong Kong
Hungary
Iceland (R&TTE)
Indonesia
Ireland (R&TTE)
Italy (R&TTE)
Japan
Korea
Liechtenstein (R&TTE)
Luxembourg (R&TTE)
Mexico
Netherlands (R&TTE)
New Zealand
Norway (R&TTE)
Philippines
Poland
Portugal (R&TTE)
Russia
Singapore
Slovakia
Spain (R&TTE)
Sweden (R&TTE)
Switzerland (R&TTE)
Taiwan
Turkey
UK (R&TTE)

* More planned

Power Requirements

3.3V DC, 235mA

Power Usage

Typical - 235mA (.77 W @ 3.3V DC)
Maximum - 260mA (.90 W @ 3.46V DC)

Physical Description

1.045" w × 2.950" h × 0.636" d;
(2.654 cm × 7.493 cm × 1.615 cm)

Operating Environment

Temperature Range: 0-70°C

Safety Certifications

UL 1950, CSA 950, EN 60950 & AS 3260

EMC

FCC Part 15 (Class B), Canada (Class B), EN 55022 (Class B) & EN 55024

Ordering Information

Models	Description	Multiple Order Quantity (MOQ)
MT5634SMI-IP	V.92/56K and IP Modem Module	50 (singles available)

Made in Mounds View, MN, U.S.A.

Trademarks: ModemModule, Multi-Tech, and the Multi-Tech logo: Multi-Tech Systems, Inc. / All other products and technologies are the trademarks or registered trademarks of their respective holders.

World Headquarters
Tel: (763) 785-3500
(800) 328-9717

www.multitech.com

Multi-Tech Systems (France)
Tel: +(33) 1 64 61 09 81

Multi-Tech Systems (UK)
Tel: +(44) 118-959 7774

3/02 86002025 Copyright © 2002 by Multi-Tech Systems, Inc. All rights reserved.