UNC20 Module

The Universal Network Controller is the newest member of FS Forth-Systeme's family of modular solutions for embedded systems requiring network connectivity. The UNC20 module is housed in an industry-standard DIL48 package, making it extremely easy and cost-effective to integrate into designs which require Ethernet connectivity. Typical applications include industrial automation systems, medical instrumentation, retail point-of-sale, data acquisition systems, building automation and control systems. The modular approach offers significant advantages compared to full custom designs since the interface to the module remains the same even if any device on the module changes. This results in a number of benefits to the OEM:

- longer product lifetimes
- easier adaptation to application's performance (speed, memory size)
- shielding of complex board technology from the user (fine pitch/multi-layer/BGA)
- cost-effective solutions for low to medium volume projects.

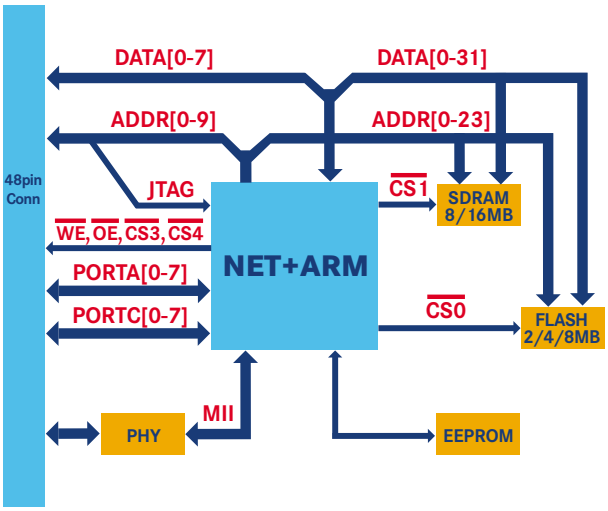

Features

- NetSilicon's NET+ARM microcontroller
- Up to 16MBytes SDRAM, 32-bit wide
- Up to 8MBytes Flash memory, 16-bit wide
- PHY for 10/100 Ethernet
- USB (in preparation)
- Two serial interfaces
- Serial EEPROM for storing configuration parameters
- I2C port
- Up to 16 programmable digital I/O pins (multiplexed with other functions)
- JTAG Interface
- External 8-bit data bus and 10-bit address bus
- 2 external chip selects
- Power Supply +3.3V

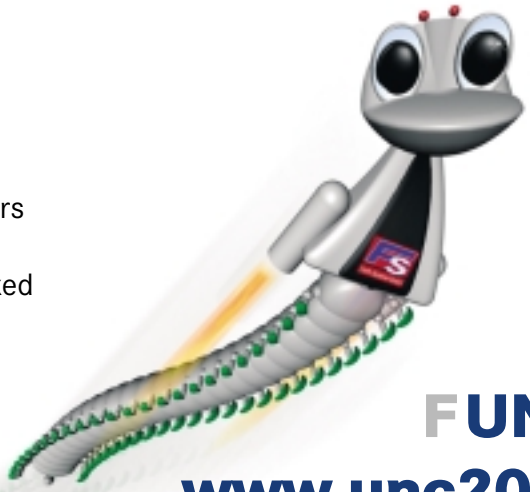

FUNCY

www.unc20.net

FS Forth-Systeme GmbH

Forth-Systeme GmbH

Postfach 1103
Kueferstrasse 8
Tel. ++49 7667 908-0
http://www.fsforth.de

D-79200 Breisach, GERMANY
D-79206 Breisach, GERMANY
Fax ++49 7667 908-200
sales@fsforth.de

FS FORTH SYSTEME

NetSilicon's NET+ARM is a cost-effective, highly integrated, 32-bit, system-on-a-chip ASIC, designed for use in intelligent networked devices and Internet appliances.
To support a variety of networking scenarios, the NET+ARM includes a 10/100 Ethernet MAC with MII interface and two independent serial ports, each of which can run in UART, HDLC or SPI mode. The CPU is an ARM7TDMI 32-bit RISC processor with a rich complement of support peripherals and memory controllers for various types of memory (including flash, SDRAM, EEPROM, and others), programmable timers, up to two 13-channel DMA controllers, an external bus expansion module, and up to 16 general-purpose I/O pins. A USB interface, supporting host and device, is in preparation.

Pinning

The UNC20 is housed in a compact DIL48 package with a 0.6in pitch (63x19x10 mm).

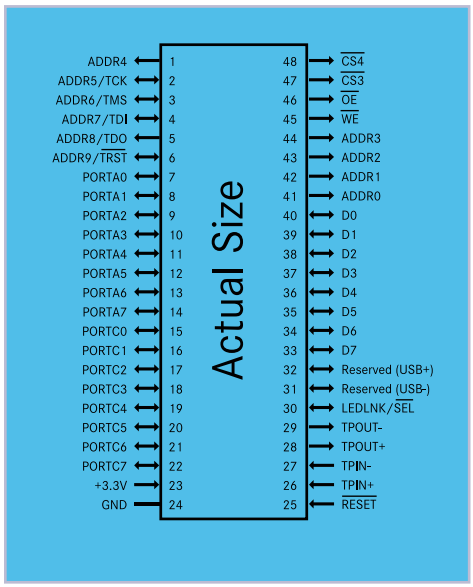

UNC20 Development Support

In addition to the compact DIL48 module, FS Forth-Systeme offers complete software development environments.

LxNET50 Embedded Linux Development System

Linux is becoming increasingly popular in embedded designs, particularly those requiring network connectivity. The main reasons for this popularity are: support for a large number of devices and networking protocols; existence of a large number of applications which require little to no porting work; open source; low cost.
FS Forth-Systeme have adapted their proven LxNET50 uClinux implementation to the UNC20 module. The development system includes:

- uClinux kernel v2.4
- Networking protocols (TCP/IP, UDP, PPP)
- Networking applications (HTTPD web server, Telnet server; FTP client, DHCP client)
- Evaluation board equipped with the UNC20 module
- GNU toolsuite

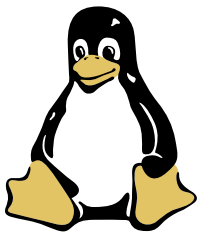

NET+OS Development System

Ideal for deeply embedded applications requiring real-time performance and small code footprints. Includes:

- ThreadX RTOS
- Networking protocols (TCP/IP, UDP, PPP, IGMP)
- Networking applications (HTTP v1.1 web server, Telnet server, FTP client and server, DHCP client, SNMP MIBII and proxy agent, POP3 and SMTP email client)
- Evaluation board equipped with the UNC20 module
- GNU toolsuite

NetSilicon
A Digi International® Company

Forth-Systeme GmbH

FS Forth-Systeme GmbH

Postfach 1103
Kueferstrasse 8
Tel. ++49 7667 908-0
http://www.fsforth.de

D-79200 Breisach, GERMANY
D-79206 Breisach, GERMANY
Fax ++49 7667 908-200
sales@fsforth.de