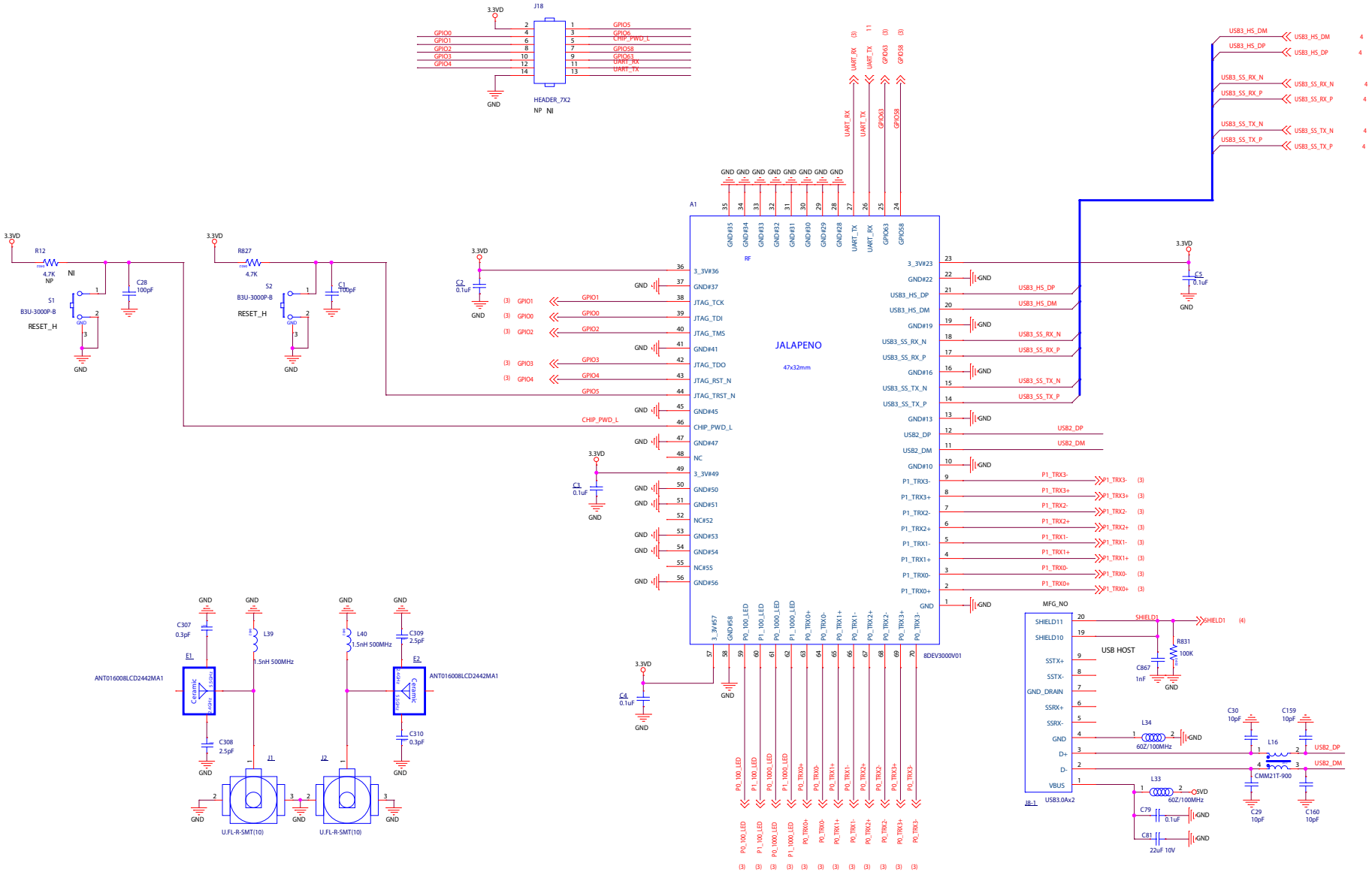
J18
HEADER_7X2
NP NI
GPIO0
GPIO1
GPIO2
GPIO3
GPIO4
GPIO5
CHIP_PWD_L
GPIO6
GPIO58
GPIO63
UART_RX
UART_TX
A1
JALAPENO
47x32mm
RF
8DEV3000V01
USB3_HS_DM
USB3_HS_DP
USB3_SS_RX_N
USB3_SS_RX_P
USB3_SS_TX_N
USB3_SS_TX_P
USB2_DP
USB2_DM
P1_TRX3-
P1_TRX3+
P1_TRX2-
P1_TRX2+
P1_TRX1-
P1_TRX1+
P1_TRX0-
P1_TRX0+
P0_100_LED
P1_100_LED
P0_1000_LED
P1_1000_LED
P0_TRX0+
P0_TRX0-
P0_TRX1+
P0_TRX1-
P0_TRX2+
P0_TRX2-
P0_TRX3+
P0_TRX3-
3_3V#36
GND#37
JTAG_TCK
JTAG_TDI
JTAG_TMS
GND#41
JTAG_TDO
JTAG_RST_N
JTAG_TRST_N
GND#45
CHIP_PWD_L
GND#47
NC
3_3V#49
GND#50
GND#51
NC#52
GND#53
GND#54
NC#55
GND#56
3_3V#23
GND#22
GND#19
GND#16
GND#13
GND#10
3_3V#57
GND#58
R12
4.7K
NP
NI
S1
B3U-3000P-B
RESET_H
C28
100pF
R827
4.7K
S2
B3U-3000P-B
RESET_H
C1
100pF
C2
0.1uF
C3
0.1uF
C4
0.1uF
C5
0.1uF
3.3VD
GND
MFG_NO
USB HOST
USB3.0Ax2
J8-1
SHIELD11
SHIELD10
SSTX+
SSTX-
GND_DRAIN
SSRX+
SSRX-
GND
D+
D-
VBUS
SHIELD1
R831
100K
C867
1nF
L34
60Z/100MHz
L33
60Z/100MHz
C79
0.1uF
C81
22uF 10V
C30
10pF
C159
10pF
L16
CMM21T-900
C29
10pF
C160
10pF
USB2_DP
USB2_DM
C307
0.3pF
L39
1.5nH 500MHz
L40
1.5nH 500MHz
C309
2.5pF
C308
2.5pF
C310
0.3pF
E1
E2
ANT01608BLCD2442MA1
Ceramic
J1
J2
U.FL-R-SMT(10)

MCU Flash

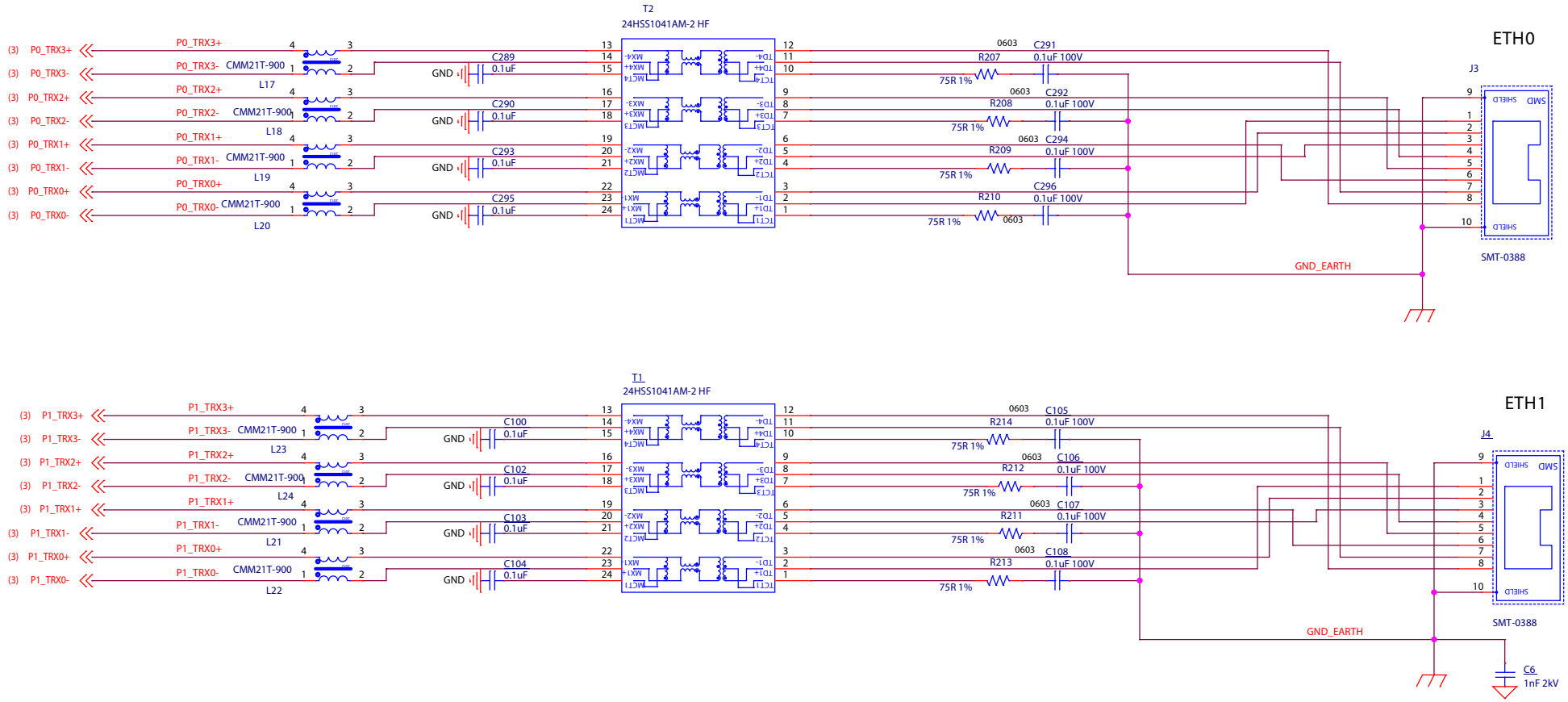
T2
24HSS1041AM-2 HF
ETH0
J3
SMT-0388
(3) P0_TRX3+
(3) P0_TRX3-
(3) P0_TRX2+
(3) P0_TRX2-
(3) P0_TRX1+
(3) P0_TRX1-
(3) P0_TRX0+
(3) P0_TRX0-
P0_TRX3+
P0_TRX3-
P0_TRX2+
P0_TRX2-
P0_TRX1+
P0_TRX1-
P0_TRX0+
P0_TRX0-
CMM21T-900
L17
L18
L19
L20
C289
C290
C293
C295
0.1uF
GND
R207
R208
R209
R210
75R 1%
0603
C291
C292
C294
C296
0.1uF 100V
GND_EARTH
SHIELD
SMD

T1
24HSS1041AM-2 HF
ETH1
J4
SMT-0388
(3) P1_TRX3+
(3) P1_TRX3-
(3) P1_TRX2+
(3) P1_TRX2-
(3) P1_TRX1+
(3) P1_TRX1-
(3) P1_TRX0+
(3) P1_TRX0-
P1_TRX3+
P1_TRX3-
P1_TRX2+
P1_TRX2-
P1_TRX1+
P1_TRX1-
P1_TRX0+
P1_TRX0-
CMM21T-900
L23
L24
L21
L22
C100
C102
C103
C104
0.1uF
GND
R214
R212
R211
R213
75R 1%
0603
C105
C106
C107
C108
0.1uF 100V
GND_EARTH
C6
1nF 2kV
SHIELD
SMD

Ethernet

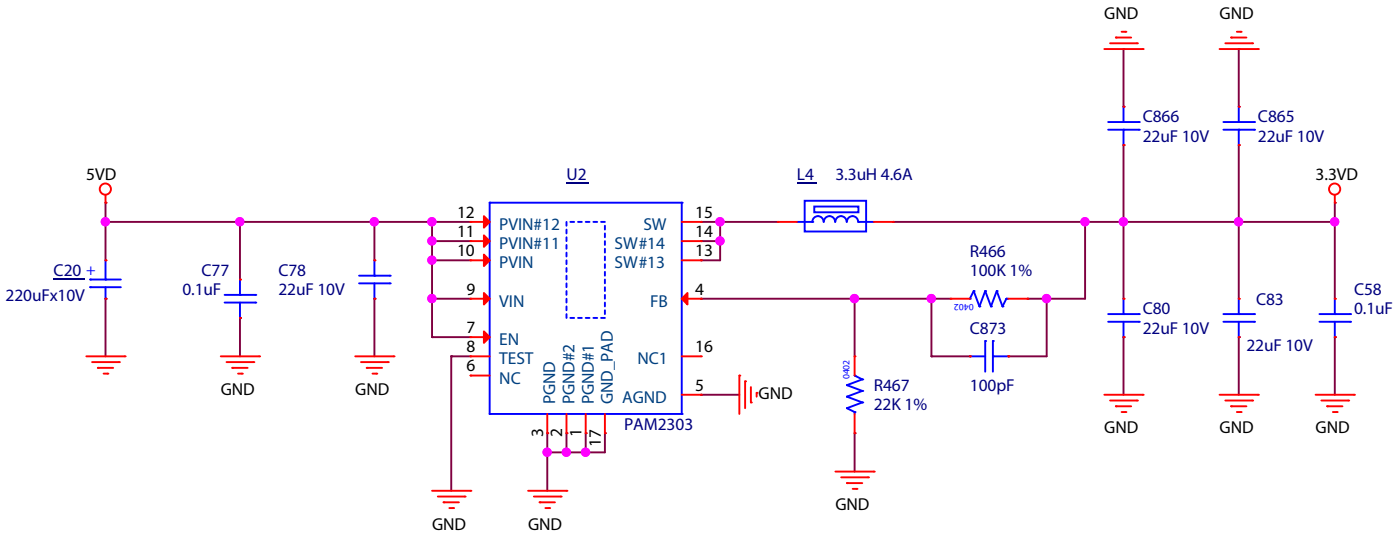
5VD
C20
220uFx10V
C77
0.1uF
C78
22uF 10V
GND
U2
PVIN#12
PVIN#11
PVIN
VIN
EN
TEST
NC
PGND
PGND#2
PGND#1
GND_PAD
SW
SW#14
SW#13
FB
NC1
AGND
PAM2303
L4
3.3uH 4.6A
R466
100K 1%
C873
100pF
R467
22K 1%
C866
22uF 10V
C865
22uF 10V
C80
22uF 10V
C83
22uF 10V
C58
0.1uF
3.3VD

Power

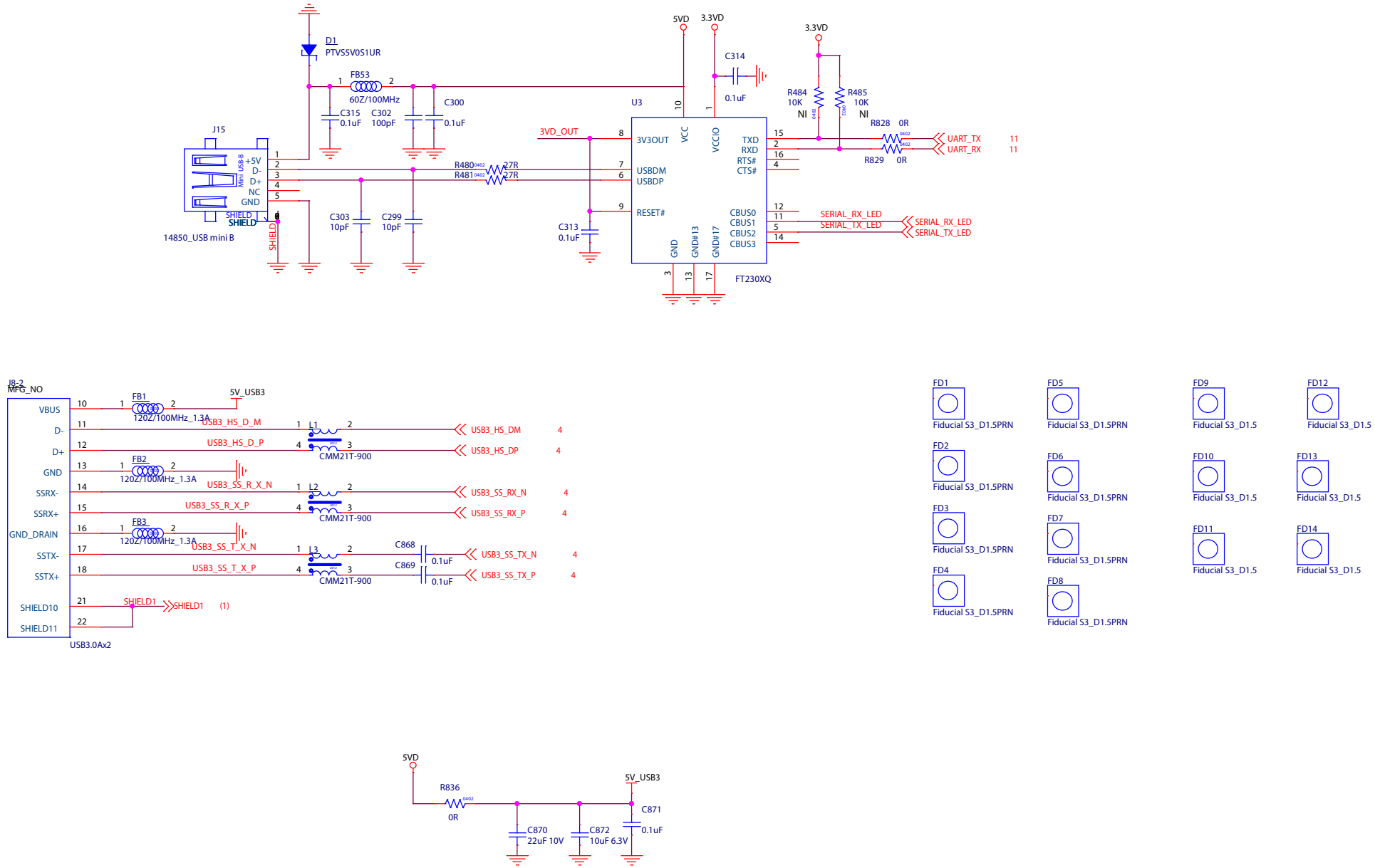
D1
PTVS5V0S1UR
FB53
60Z/100MHz
C315
0.1uF
C302
100pF
C300
0.1uF
J15
Mini USB-B
+5V
D-
D+
NC
GND
SHIELD
14850_USB mini B
C303
10pF
C299
10pF
R480
R481
27R
27R
3VD_OUT
C313
0.1uF
5VD
3.3VD
C314
0.1uF
U3
3V3OUT
VCC
VCCIO
USBDM
USBDP
RESET#
GND
GND#13
GND#17
TXD
RXD
RTS#
CTS#
CBUS0
CBUS1
CBUS2
CBUS3
FT230XQ
R484
10K
NI
R485
10K
NI
R828 0R
R829 0R
UART_TX
UART_RX
SERIAL_RX_LED
SERIAL_TX_LED
J8-2
MFG_NO
VBUS
D-
D+
GND
SSRX-
SSRX+
GND_DRAIN
SSTX-
SSTX+
SHIELD10
SHIELD11
USB3.0Ax2
FB1
120Z/100MHz_1.3A
5V_USB3
USB3_HS_D_M
USB3_HS_D_P
L1
CMM21T-900
USB3_HS_DM
USB3_HS_DP
FB2
120Z/100MHz_1.3A
USB3_SS_R_X_N
USB3_SS_R_X_P
L2
CMM21T-900
USB3_SS_RX_N
USB3_SS_RX_P
FB3
120Z/100MHz_1.3A
USB3_SS_T_X_N
USB3_SS_T_X_P
L3
CMM21T-900
C868
C869
0.1uF
0.1uF
USB3_SS_TX_N
USB3_SS_TX_P
SHIELD1
(1)
FD1
FD2
FD3
FD4
FD5
FD6
FD7
FD8
FD9
FD10
FD11
FD12
FD13
FD14
Fiducial S3_D1.5PRN
Fiducial S3_D1.5
5VD
R836
0R
5V_USB3
C870
22uF 10V
C872
10uF 6.3V
C871
0.1uF

USB serial

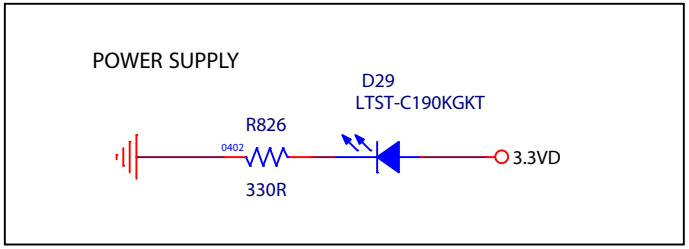
POWER SUPPLY
D29
LTST-C190KGKT
R826
0402
330R
3.3VD

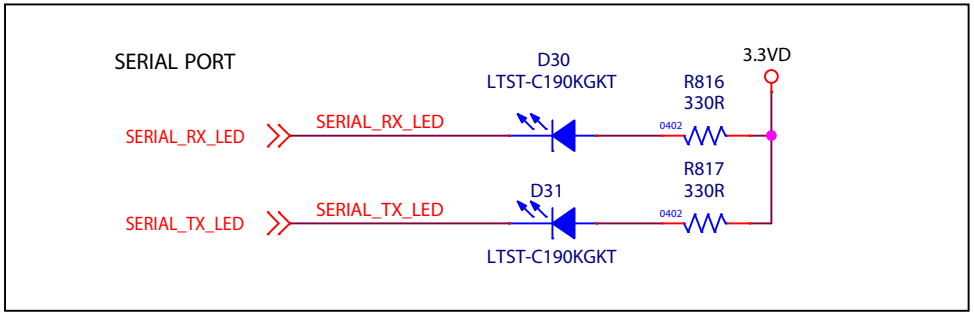
SERIAL PORT
D30
LTST-C190KGKT
3.3VD
R816
330R
SERIAL_RX_LED
SERIAL_RX_LED
0402
R817
330R
D31
SERIAL_TX_LED
SERIAL_TX_LED
0402
LTST-C190KGKT

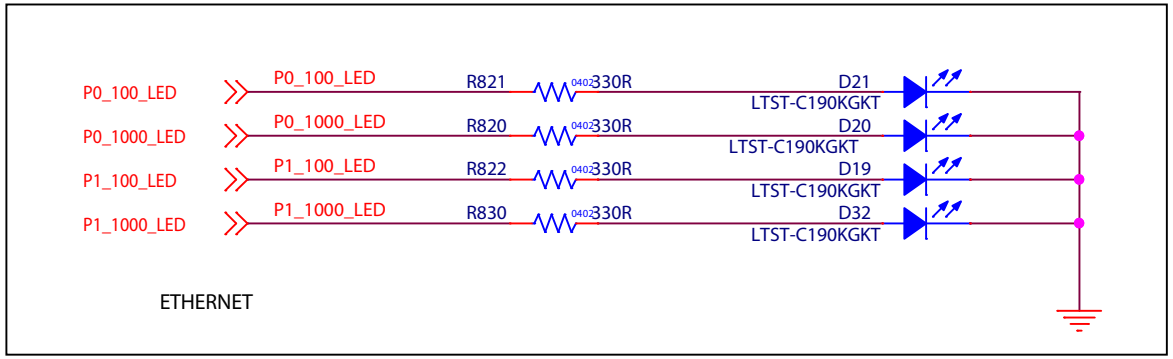
P0_100_LED
P0_100_LED
R821
0402
330R
D21
LTST-C190KGKT
P0_1000_LED
P0_1000_LED
R820
0402
330R
D20
LTST-C190KGKT
P1_100_LED
P1_100_LED
R822
0402
330R
D19
LTST-C190KGKT
P1_1000_LED
P1_1000_LED
R830
0402
330R
D32
LTST-C190KGKT
ETHERNET

Leds