BlueBean USB Stick DVK

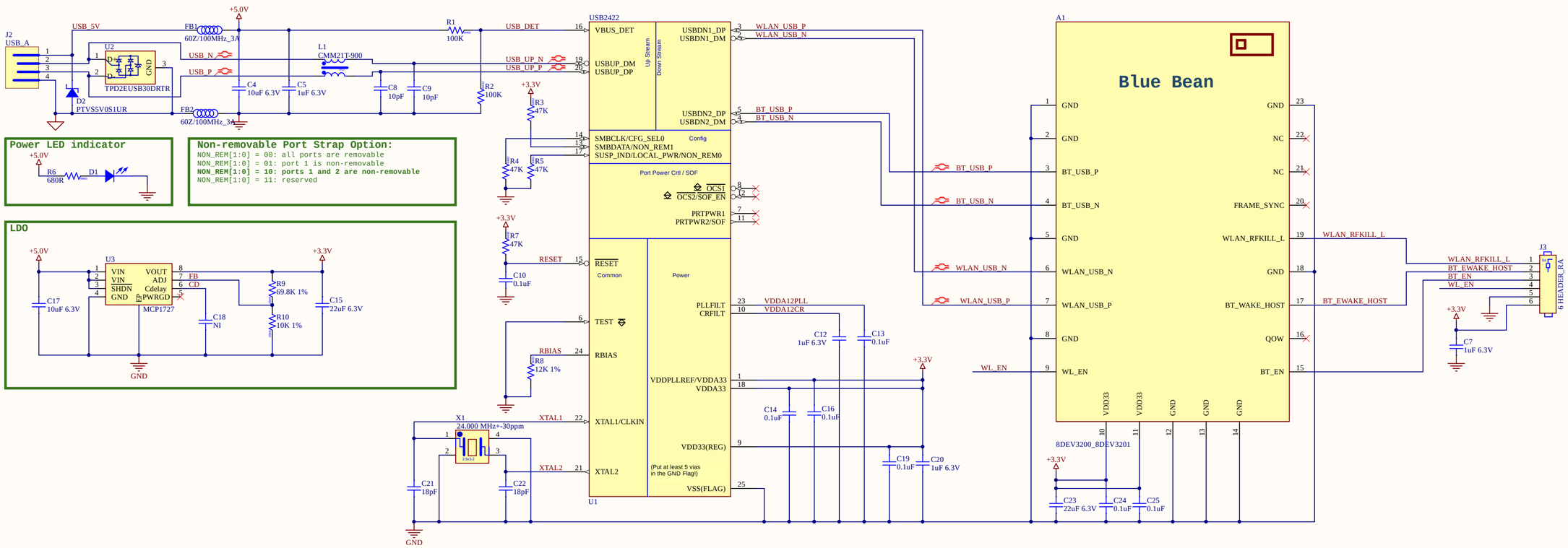

Devices	**8 devices**
Model No.:	8DEV_3220_0002.PrjPcb
Title:	BlueBean Stick DVK
SCH Rev.	v2.0
Approved By:	
Designed By:	
Date:	2019-11-15
Sheet:	1 of 1